**SERVICE & OPERATING MANUAL**

SANDPIPER®
A WARREN RUPP PUMP BRAND

# Model S15 Metallic Design Level 1

See page 2
for ATEX ratings.

U.S. Patent #
5,996,627; 6,241,487
Other U.S. Patents
Applied for

## Table of Contents


Engineering Data and Temperature Limitations ..... 1
Explanation of Pump Nomenclature ..... 2
Performance Curve ..... 3
Dimensions ..... 4
Metric Dimensions ..... 5
Principle of Pump Operation ..... 6
Installation and Start-Up ..... 6
Air Supply ..... 6
Air Valve Lubrication ..... 6
Air Line Moisture ..... 6
Air Inlet and Priming ..... 6
Between Uses ..... 6
Installation Guide ..... 7
Troubleshooting ..... 8
Warranty ..... 8
Recycling ..... 9
Important Safety Information ..... 9
Material Codes ..... 10
Composite Repair Parts Drawing ..... 12
Available Service and Conversion Kits ..... 12
Composite Repair Parts List ..... 13
Air Valve Drawing, Parts List, Service Instructions ..... 14
Air Valve Drawing, Parts List, Service Instructions ..... 15
Air Valve w/Stroke Indicator Drawing and Parts List ..... 16
Air Valve w/Stroke Indicator Servicing ..... 17
Solenoid Shifted Air Valve Drawing ..... 18
Solenoid Shifted Air Valve Parts List ..... 18
Solenoid Shifted Air Valve Option ..... 19
Diaphragm Service Drawing, with Overlay ..... 20
Diaphragm Service Drawing, Non-Overlay ..... 20
Diaphragm Servicing ..... 21
Overlay Diaphragm Servicing ..... 21
Pilot Valve Servicing, Assembly Drawing & Parts List ..... 22
Actuator Plunger Servicing ..... 23
Check Valve Servicing ..... 24
Check Valve Drawing ..... 24
Optional Muffler Configurations ..... 25
Optional Muffler Configuration Drawing ..... 25
Pumping Hazardous Liquids ..... 26
Converting Pump for Piping Exhaust Air ..... 26
Converted Exhaust Illustration ..... 26
Pulse Output Kit Drawing ..... 27
Pulse Output Kit Options ..... 27
Grounding the Pump ..... 28
CE Declaration of Conformity ..... 29



WARREN RUPP®, IDEX AODD, Inc. • A Unit of IDEX Corporation • 800 N. Main St., P.O. Box 1568, Mansfield, Ohio 44901-1568 USA
Telephone (419) 524-8388 • Fax (419) 522-7867 • www.warrenrupp.com



s15mdl1sm-REV0509



©Copyright 2009 IDEX AODD, Inc. All rights reserved.

WARREN RUPP®

*Quality System ISO9001 Certified*

*Environmental Management System ISO14001 Certified*

IDEX FLUID & METERING

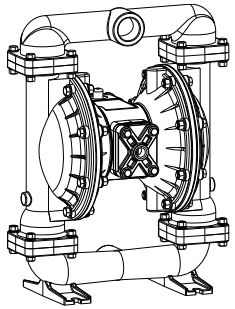

**Air Inlet Side View**

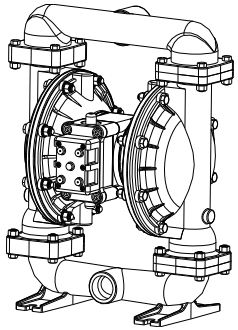

**Air Exhaust Side View**

See page 2 for ATEX ratings.

U.S. Patent # 5,996,627
Other U.S. Patents Applied for

SANDPIPER®
A WARREN RUPP PUMP BRAND

# S15 Metallic Design Level 1 Ball Valve

## Air-Operated Double Diaphragm Pump

ENGINEERING, PERFORMANCE & CONSTRUCTION DATA

| INTAKE/DISCHARGE PIPE SIZE | CAPACITY | AIR VALVE | SOLIDS-HANDLING | HEADS UP TO | DISPLACEMENT/STROKE |
|---|---|---|---|---|---|
| 1½" NPT (internal)<br>1½" BSP Tapered (internal) | 0 to 106 gallons per minute<br>(0 to 401 liters per minute) | No-lube, no-stall design | Up to .25 in. (6mm) | 125 psi or 289 ft. of water<br>(8.6 Kg/cm² or 86 meters) | .41 Gallon / 1.55 liter |

**CAUTION!** ***Operating temperature limitations are as follows:***

| Materials | Operating Temperatures Maximum | Operating Temperatures Minimum |
|---|---|---|
| **Nitrile:** General purpose, oil-resistant. Shows good solvent, oil, water and hydraulic fluid resistance. Should not be used with highly polar solvents like acetone and MEK, ozone, chlorinated hydrocarbons and nitro hydrocarbons. | 190° F<br>88° C | -10° F<br>-23° C |
| **EPDM:** Shows very good water and chemical resistance. Has poor resistance to oil and solvents, but is fair in ketones and alcohols. | 280° F<br>138° C | -40° F<br>-40° C |
| **Neoprene:** All purpose. Resistant to vegetable oil. Generally not affected by moderate chemicals, fats, greases and many oils and solvents. Generally attacked by strong oxidizing acids, ketones, esters, nitro hydrocarbons and chlorinated aromatic hydrocarbons. | 200° F<br>93° C | -10° F<br>-23° C |
| **Santoprene®:** Injection molded thermoplastic elastomer with no fabric layer. Long mechanical flex life. Excellent abrasion resistance. | 275° F<br>135° C | -40° F<br>-40° C |
| **Virgin PTFE:** Chemically inert, virtually impervious. Very few chemicals are known to react chemically with PTFE- molten alkali metals, turbulent liquid or gaseous fluorine and a few fluoro-chemicals such as chlorine trifluoride or oxygen difluoride which readily liberate free fluorine at elevated temperatures. | 220° F<br>104° C | -35° F<br>-37° C |
| **FKM (Fluorocarbon):** Shows good resistance to a wide range of oils and solvents; especially all aliphatic, aromatic and halogenated hydrocarbons, acids, animal and vegetable oils. Hot water or hot aqueous solutions (over 70°F) will attack FKM. | 350° F<br>177° C | -40° F<br>-40° C |
| **Polypropylene:** | 180° F<br>82° C | 32° F<br>0° C |
| **Polyethylene:** | 180° F<br>82° C | -35° F<br>-37° C |

For specific applications, always consult the Warren Rupp Chemical Resistance Chart

**SANDPIPER® pumps are designed to be powered only by compressed air.**

# Explanation of Pump Nomenclature, S15 Metallic · Design Level 1· Ball Valve

| Model | Pump Brand | Pump Size | Check Valve Type | Design Level | Wetted Material | Diaphragm/ Check Valve Materials | Check Valve Seat | Non-Wetted Material Options | Porting Options | Pump Style | Pump Options | Kit Options | Shipping Weight lbs. (kg) |
|---|---|---|---|---|---|---|---|---|---|---|---|---|---|
| S15B1ABWANS000. | S | 15 | B | 1 | A | B | W | A | N | S | 0 | 00. | 53 (24) |
| S15B1AEWANS000. | S | 15 | B | 1 | A | E | W | A | N | S | 0 | 00. | 53 (24) |
| S15B1ANWANS000. | S | 15 | B | 1 | A | N | W | A | N | S | 0 | 00. | 53 (24) |
| S15B1IBWANS000. | S | 15 | B | 1 | I | B | W | A | N | S | 0 | 00. | 93 (42) |
| S15B1IEWANS000. | S | 15 | B | 1 | I | E | W | A | N | S | 0 | 00. | 93 (42) |
| S15B1I1WANS000. | S | 15 | B | 1 | I | 1 | W | A | N | S | 0 | 00. | 93 (42) |
| S15B1IVTANS000. | S | 15 | B | 1 | I | V | T | A | N | S | 0 | 00. | 93 (42) |
| S15B1SGTANS000. | S | 15 | B | 1 | S | G | T | A | N | S | 0 | 00. | 95 (43) |
| S15B1S1WANS000. | S | 15 | B | 1 | S | 1 | W | A | N | S | 0 | 00. | 95 (43) |
| S15B1SVTANS000. | S | 15 | B | 1 | S | V | T | A | N | S | 0 | 00. | 95 (43) |

**Note: Models listed in the table are for reference only. See nomenclature below for other models.**

**Pump Brand**
S= SANDPIPER®

**Pump Size**
15=1½"

**Check Valve Type**
B= Ball
W= Weighted Ball

**Design Level**
1= Design Level

**Wetted Material**
A= Aluminum
I = Cast Iron
S= Stainless Steel
H= Alloy C

**Diaphragm Check Valve Materials**
1= Santoprene/Santoprene
2= PTFE-Santoprene/PTFE
B= Nitrile/Nitrile
C= FKM/PTFE
E= EPDM/EPDM
I = EPDM/Santoprene
G= PTFE-Neoprene/PTFE
N= Neoprene/Neoprene
V= FKM/FKM
Z= One-Piece Bonded/PTFE

**Check Valve Seat**
A= Aluminum
C= Carbon Steel
S= Stainless Steel
T= PTFE
W= UHMW

**Non-Wetted Material Options**
A= Painted Aluminum
I = Cast Iron
J= Painted Aluminum w/PTFE Coated Hardware
S= Stainless Steel with Stainless Steel Hardware
Y= Painted Aluminum with Stainless Steel Hardware
Z= Cast Iron with Stainless Steel Hardware

**Porting Options**
N= NPT Threads
B= BSP (Tapered) Threads
R= Raised Face 150# Threaded ANSI Flange

**Pump Style**
S= Standard

**Pump Options**
0= None
1= Sound Dampening Muffler
2= Mesh Muffler
3= High temperature Air Valve w/Integral Muffler
4= High temperature Air Valve w/Sound Dampening Muffler
5= High temperature Air Valve w/Mesh Muffler
⚠ 6= Metal Muffler
⚠ 7= Metal Muffler with Grounding Cable

**Kit Options**
⚠ 00.= None
P0.= 10-30VDC Pulse Output Kit
◇ P1.= Intrinsically-Safe 5-30VDC, 110/120VAC 220/240 VAC Pulse Output Kit
P2.= 110/120 or 220/240VAC Pulse Output Kit
E0.= Solenoid Kit with 24VDC Coil
△ E1.= Solenoid Kit with 24VDC Explosion-Proof Coil
E2.= Solenoid Kit with 24VAC/12VDC Coil
△ E3.= Solenoid Kit with 12VDC Explosion-Proof Coil
E4.= Solenoid Kit with 110VAC Coil
△ E5.= Solenoid Kit with 110VAC Explosion-Proof Coil
E6.= Solenoid Kit with 220VAC Coil

**Kit Options continued**
△ E7.= Solenoid Kit with 220VAC Explosion-Proof Coil
△ E8.= Solenoid Kit with 110VAC, 50 Hz Explosion-Proof Coil
△ E9.= Solenoid Kit with 230VAC, 50 Hz Explosion-Proof Coil
SP.= Stroke Indicator Pins

◆ A1.= Solenoid Kit with 12 VDC Explosion-Proof Coil
◆ A2.= Solenoid Kit with 24 VDC Explosion-Proof Coil
◆ A3.= Solenoid Kit with 110/120 VAC 50/60 Hz Explosion-Proof Coil
◆ A4.= Solenoid Kit with 220/240 VAC 50/60 Hz Explosion-Proof Coil

(1) Ex II 2GD T5

⚠ Note: Pumps are only ATEX compliant when ordered with pump option 6 or 7, and kit option 0.

(2) Ex II 2G Ex ia c IIC T5
II 2D c iaD 20 IP67 T100˚C

◇ Note: Pumps ordered with the options listed in (1) to the left are ATEX compliant when ordered with kit option P1.

(3*) Ex II 2G EEx m c T5
II 2D c IP65 T100°C

◆ Note: Pumps ordered with the options listed in (1) to the left are ATEX compliant when ordered with kit option A1, A2, A3, or A4.

*Note: See page 18 for **Special Conditions For Safe Use**.

(4) FM APPROVED IEC EEX m T4 CSA®

△ Note: Pump models equipped with these explosion-proof solenoid kit options E1, E3, E5, E7, E8 or E9, are certified and approved by the above agencies. They are NOT ATEX compliant.

# Performance Curve, S15 Metallic Design Level 1

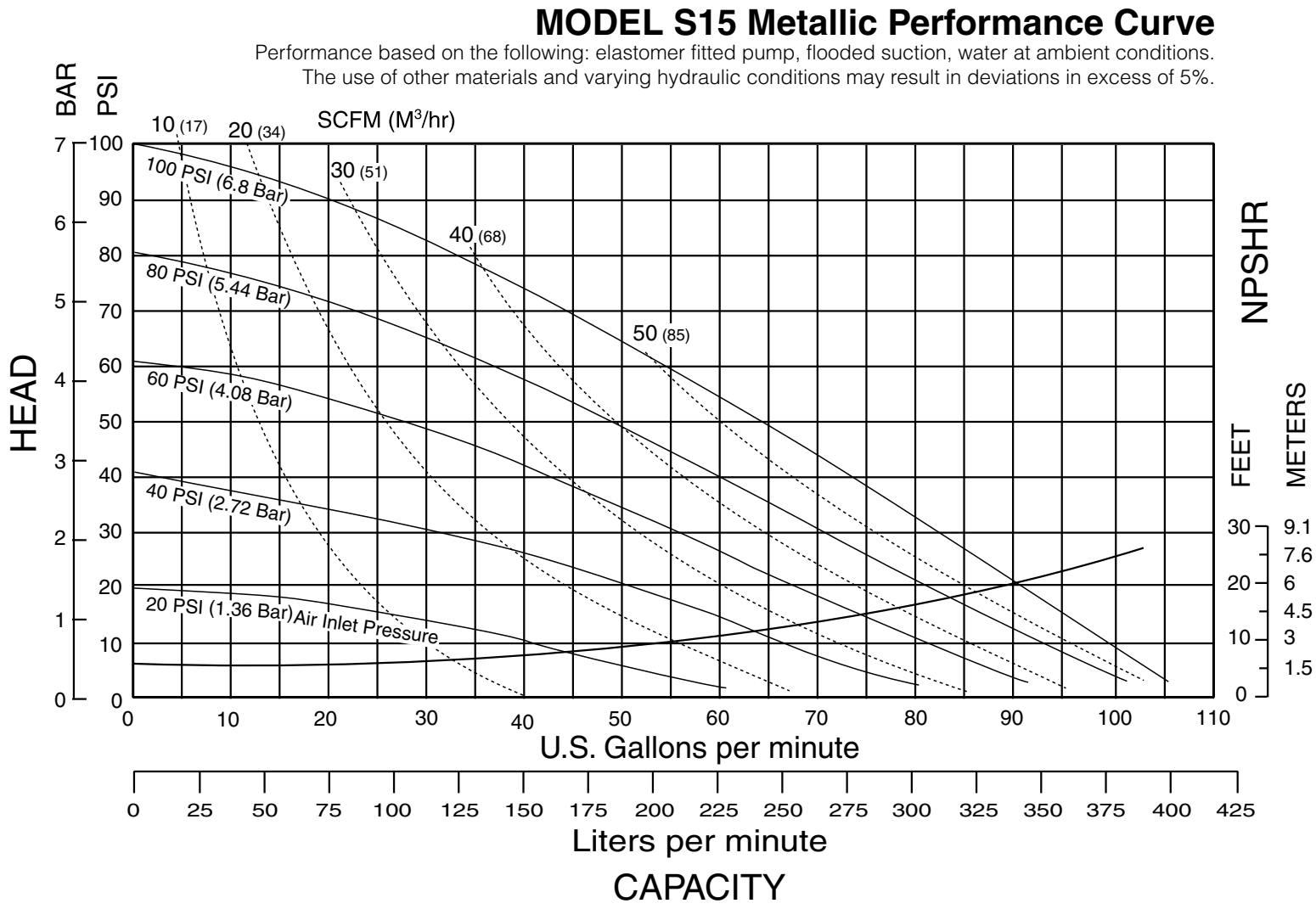

# Dimensions: S15 Metallic

Dimensions in Inches
Dimensional Tolerance:±1/8"

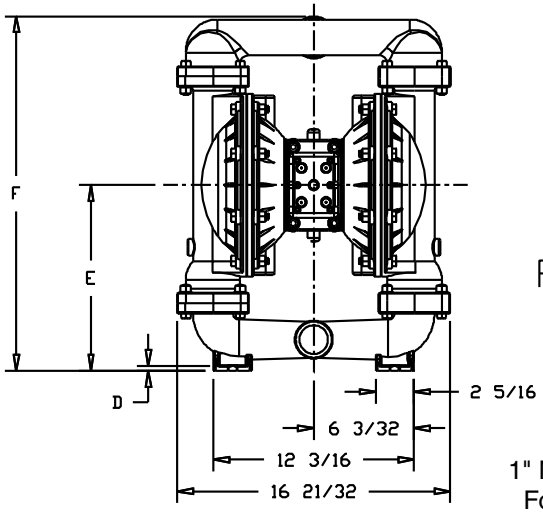


FRONT VIEW

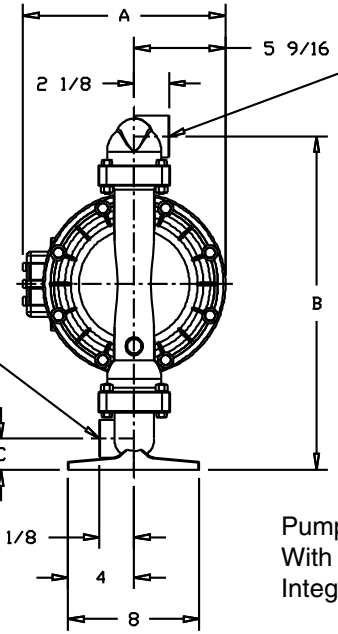


SIDE VIEW

Pump Shown
With 530-028-550
Integral Muffler

Both Suction and Discharge
Ports Are Available With
1 1/2" BSP Tapered Connection

Integral Muffler
1" NPT Exhaust Port
For optional Muffler
Styles or Piping Exhaust
Air In Sumerged
Applications.

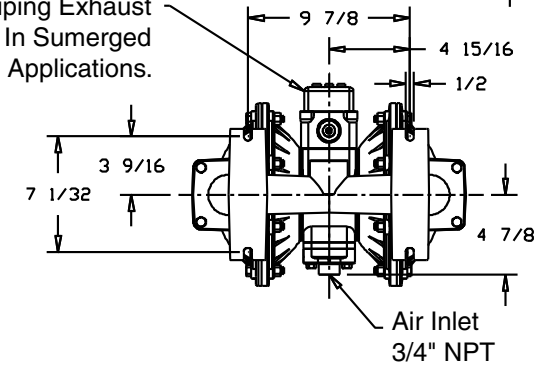


BOTTOM VIEW

| Dimension | A | B | C | D | E | F |
|---|---|---|---|---|---|---|
| Integral Muffler | 12 11/32 | | | | | |
| Pulse Output Kit | 12 11/32 | | | | | |
| Aluminum | | 20 5/16 | 1 29/32 | 5/16 | 11 5/16 | 21 19/32 |
| Stainless Steel | | 20 3/8 | 1 31/32 | 3/8 | 11 3/8 | 21 21/32 |
| Mesh Muffler | 14 15/16 | | | | | |
| Sound Dampening Muffler | 14 15/16 | | | | | |
| Metal Muffler | 14 1/2 | | | | | |

# Metric Dimensions:

Dimensions in Millimeters
Dimensional Tolerance:± 3mm

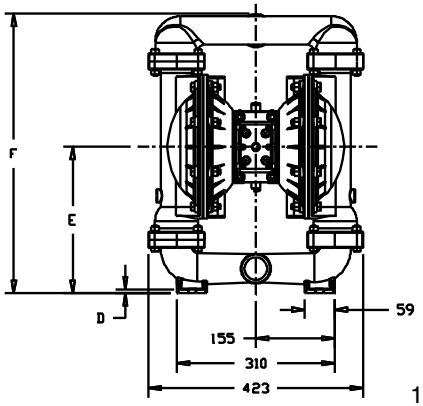


FRONT VIEW

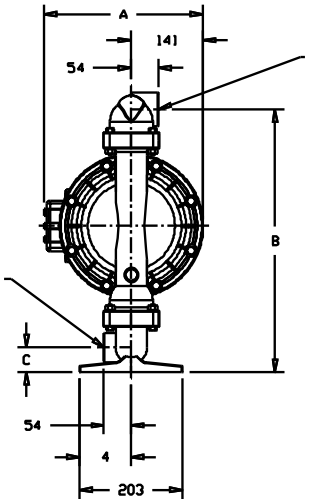


Discharge Port
1 1/2" NPT

Suction Port
1 1/2" NPT

SIDE VIEW

Pump Shown
With 530-028-550
Integral Muffler

Integral Muffler
1" NPT Exhaust Port
For Optional Muffler
Styles or Piping Exhaust
Air in Submerged
Applications.

Both Suction and Discharge
Ports Are Available With
1 1/2" BSP Tapered Connection

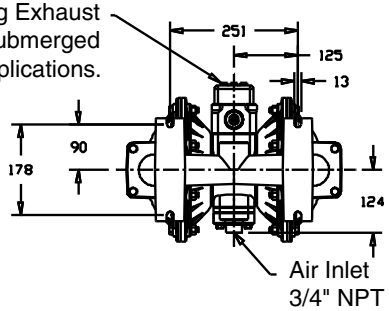


BOTTOM VIEW

Air Inlet
3/4" NPT

| Dimension | A | B | C | D | E | F |
|---|---|---|---|---|---|---|
| Integral Muffler | 314 | | | | | |
| Pulse Output Kit | 314 | | | | | |
| Aluminum | | 516 | 48 | 8 | 287 | 548 |
| Stainless Steel | | 518 | 50 | 10 | 289 | 550 |
| Mesh Muffler | 379 | | | | | |
| Sound Dampening Muffler | 379 | | | | | |
| Metal Muffler | 368 | | | | | |

## PRINCIPLE OF PUMP OPERATION

This ball type check valve pump is powered by compressed air and is a 1:1 ratio design. The inner side of one diaphragm chamber is alternately pressurized while simultaneously exhausting the other inner chamber. This causes the diaphragms, which are connected by a common rod secured by plates to the centers of the diaphragms, to move in a reciprocating action. (As one diaphragm performs the discharge stroke the other diaphragm is pulled to perform the suction stroke in the opposite chamber.) Air pressure is applied over the entire inner surface of the diaphragm while liquid is discharged from the opposite side of the diaphragm. The diaphragm operates in a balanced condition during the discharge stroke which allows the pump to be operated at discharge heads over 200 feet (61 meters) of water.

For maximum diaphragm life, keep the pump as close to the liquid being pumped as possible. Positive suction head in excess of 10 feet of liquid (3.048 meters) may require a back pressure regulating device to maximize diaphragm life.

Alternate pressurizing and exhausting of the diaphragm chamber is performed by an externally mounted, pilot operated, four way spool type air distribution valve. When the spool shifts to one end of the valve body, inlet pressure is applied to one diaphragm chamber and the other diaphragm chamber exhausts. When the spool shifts to the opposite end of the valve body, the pressure to the chambers is reversed. The air distribution valve spool is moved by a internal pilot valve which alternately pressurizes one end of the air distribution valve spool while exhausting the other end. The pilot valve is shifted at each end of the diaphragm stroke when a actuator plunger is contacted by the diaphragm plate. This actuator plunger then pushes the end of the pilot valve spool into position to activate the air distribution valve.

The chambers are connected with manifolds with a suction and discharge check valve for each chamber, maintaining flow in one direction through the pump.

## INSTALLATION AND START-UP

Locate the pump as close to the product being pumped as possible. Keep the suction line length and number of fittings to a minimum. Do not reduce the suction line diameter.

For installations of rigid piping, short sections of flexible hose should be installed between the pump and the piping. The flexible hose reduces vibration and strain to the pumping system. A Warren Rupp Tranquilizer® surge suppressor is recommended to further reduce pulsation in flow.

## AIR SUPPLY

Air supply pressure cannot exceed 125 psi (8.6 bar). Connect the pump air inlet to an air supply of sufficient capacity and pressure required for desired performance. When the air supply line is solid piping, use a short length of flexible hose not less than ½" (13mm) in diameter between the pump and the piping to reduce strain to the piping. The weight of the air supply line, regulators and filters must be supported by some means other than the air inlet cap. Failure to provide support for the piping may result in damage to the pump. A pressure regulating valve should be installed to insure air supply pressure does not exceed recommended limits.

## AIR VALVE LUBRICATION

The air distribution valve and the pilot valve are designed to operate WITHOUT lubrication. This is the preferred mode of operation. There may be instances of personal preference or poor quality air supplies when lubrication of the compressed air supply is required. The pump air system will operate with properly lubricated compressed air supply. Proper lubrication requires the use of an air line lubricator (available from Warren Rupp) set to deliver one drop of SAE 10 non-detergent oil for every 20 SCFM (9.4 liters/sec.) of air the pump consumes at the point of operation. Consult the pump's published Performance Curve to determine this.

## AIR LINE MOISTURE

Water in the compressed air supply can create problems such as icing or freezing of the exhaust air, causing the pump to cycle erratically or stop operating. Water in the air supply can be reduced by using a point-of-use air dryer to supplement the user's air drying equipment. This device removes water from the compressed air supply and alleviates the icing or freezing problems.

## AIR INLET AND PRIMING

To start the pump, open the air valve approximately 1/2" to 3/4" turn. After the pump primes, the air valve can be opened to increase air flow as desired. If opening the valve increases cycling rate, but does not increase the rate of flow, cavitation has occurred. The valve should be closed slightly to obtain the most efficient air flow to pump flow ratio.

## BETWEEN USES

When the pump is used for materials that tend to settle out or solidify when not in motion, the pump should be flushed after each use to prevent damage. (Product remaining in the pump between uses could dry out or settle out. This could cause problems with the diaphragms and check valves at restart.) In freezing temperatures the pump must be completely drained between uses in all cases.

# TYPICAL INSTALLATION GUIDE
## For Metallic Pumps

Available from Warren Rupp

① **TD1½ or TD40 Tranquilizer**
② **020-050-000 Filter/Regulator**
③ **020-050-001 Lubricator**
④ **Air Dryer**

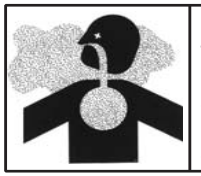

**⚠ CAUTION**
The air exhaust should be piped to an area for safe disposition of the product being pumped, in the event of a diaphragm failure.

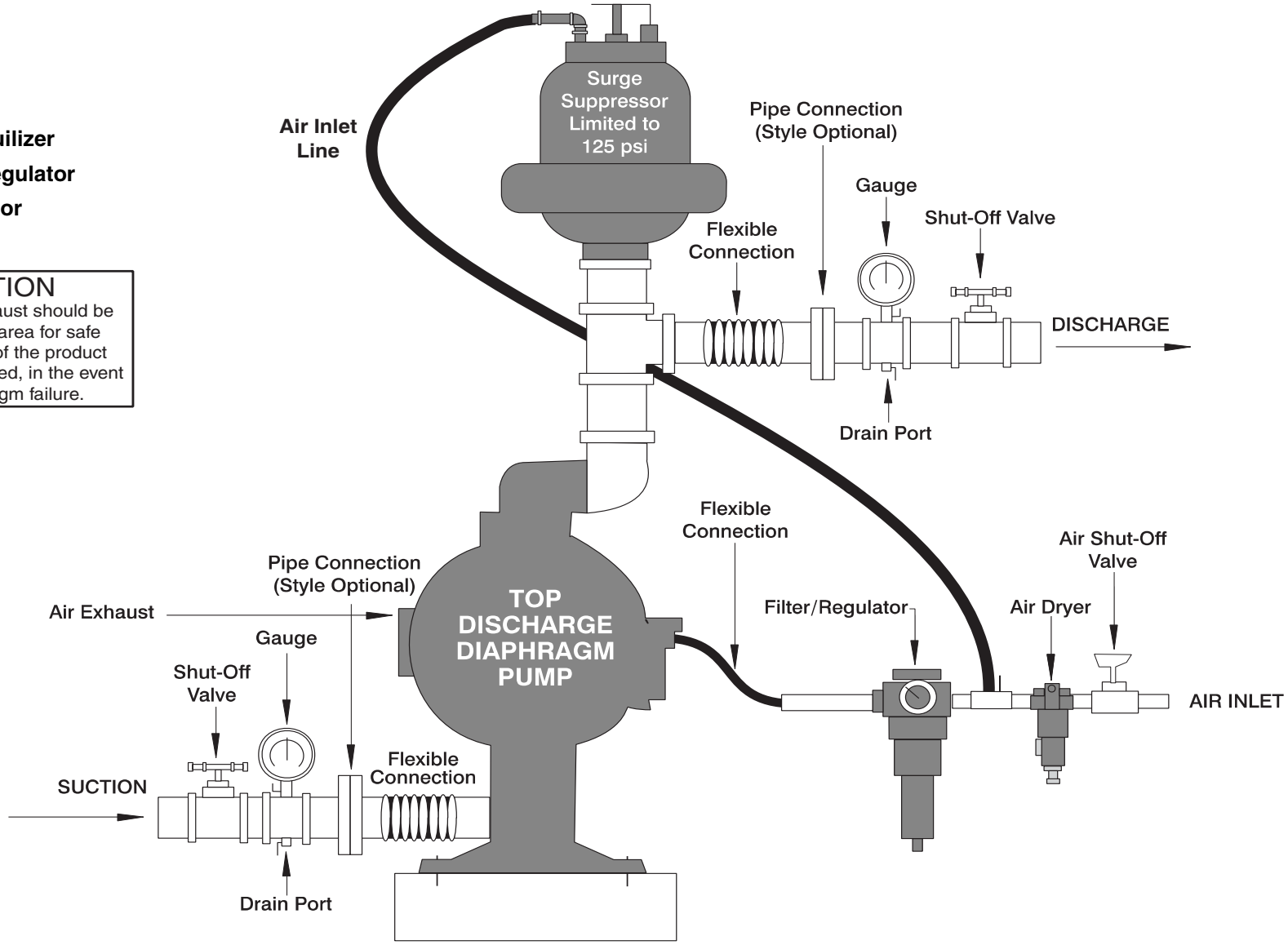

## TROUBLESHOOTING

**Possible Symptoms:**

- Pump will not cycle.
- Pump cycles, but produces no flow.
- Pump cycles, but flow rate is unsatisfactory.
- Pump cycle seems unbalanced.
- Pump cycle seems to produce excessive vibration.

**What to Check:** Excessive suction lift in system.
**Corrective Action:** For lifts exceeding 20 feet (6 meters), filling the pumping chambers with liquid will prime the pump in most cases.

**What to Check:** Excessive flooded suction in system.
**Corrective Action:** For flooded conditions exceeding 10 feet (3 meters) of liquid, install a back pressure device.

**What to Check:** System head exceeds air supply pressure.
**Corrective Action:** Increase the inlet air pressure to the pump. Most diaphragm pumps are designed for 1:1 pressure ratio at zero flow.

**What to Check:** Air supply pressure or volume exceeds system head.
**Corrective Action:** Decrease inlet air pressure and volume to the pump as calculated on the published PERFORMANCE CURVE. Pump is cavitating the fluid by fast cycling.

**What to Check:** Undersized suction line.
**Corrective Action:** Meet or exceed pump connection recommendations shown on the DIMENSIONAL DRAWING.

**What to Check:** Restricted or undersized air line.
**Corrective Action:** Install a larger air line and connection. Refer to air inlet recommendations shown in your pump's SERVICE MANUAL.

**What to Check:** Check ESADS+Plus, the Externally Serviceable Air Distribution System of the pump.
**Corrective Action:** Disassemble and inspect the main air distribution valve, pilot valve and pilot valve actuators. Refer to the parts drawing and air valve section of the SERVICE MANUAL. Check for clogged discharge or closed valve before reassembly.

**What to Check:** Rigid pipe connections to pump.
**Corrective Action:** Install flexible connectors and a Warren Rupp Tranquilizer® Surge Suppressor.

**What to Check:** Blocked air exhaust muffler.
**Corrective Action:** Remove muffler screen, clean or de-ice and reinstall. Refer to the Air Exhaust section of your pump SERVICE MANUAL.

**What to Check:** Pumped fluid in air exhaust muffler.
**Corrective Action:** Disassemble pump chambers. Inspect for diaphragm rupture or loose diaphragm plate assembly. Refer to the Diaphragm Replacement section of your pump SERVICE MANUAL.

**What to Check:** Suction side air leakage or air in product.
**Corrective Action:** Visually inspect all suction side gaskets and pipe connections.

**What to Check:** Obstructed check valve.
**Corrective Action:** Disassemble the wet end of the pump and manually dislodge obstruction in the check valve pocket. Refer to the Check Valve section of the pump SERVICE MANUAL for disassembly instructions.

**What to Check:** Worn or misaligned check valve or check valve seat.
**Corrective Action:** Inspect check valves and seats for wear and proper seating. Replace if necessary. Refer to Check Valve section of the pump SERVICE MANUAL for disassembly instructions.

**What to Check:** Blocked suction line.
**Corrective Action:** Remove or flush obstruction. Check and clear all suction screens and strainers.

**What to Check:** Blocked discharge line.
**Corrective Action:** Check for obstruction or closed discharge line valves.

**What to Check:** Blocked pumping chamber.
**Corrective Action:** Disassemble and inspect the wetted chambers of the pump. Remove or flush any obstructions. Refer to the pump SERVICE MANUAL for disassembly instructions.

**What to Check:** Entrained air or vapor lock in one or both pumping chambers.
**Corrective Action:** Purge chambers through tapped chamber vent plugs. PURGING THE CHAMBERS OF AIR CAN BE DANGEROUS! Contact the Warren Rupp Technical Services Group before performing this procedure. Any model with top-ported discharge will reduce or eliminate problems with entrained air.

If your pump continues to perform below your expectations, contact your local Warren Rupp Distributor or factory Technical Services Group for a service evaluation.

## WARRANTY

Refer to the enclosed Warren Rupp Warranty Certificate.

# Recycling

Many components of SANDPIPER® Metallic AODD pumps are made of recyclable materials (see chart on page 10 for material specifications). We encourage pump users to recycle worn out parts and pumps whenever possible, after any hazardous pumped fluids are thoroughly flushed.

I M2 c T5
II 2GD T5

Pump complies with EN809 Pumping Directive, Directive 98/37/EC Safety of Machinery, and Directive 94/9/EC, EN13463-1 Equipment for use in Potentially Explosive Environments. For reference to the directive certificates visit: www.warrenrupp.com. The Technical File No. AX1 is stored at KEMA, Notified Body 0344, under Document #203040000.

## IMPORTANT SAFETY INFORMATION

**⚠ IMPORTANT**

***Read these safety warnings and instructions in this manual completely, before installation and start-up of the pump. It is the responsibility of the purchaser to retain this manual for reference. Failure to comply with the recommendations stated in this manual will damage the pump, and void factory warranty.***

**⚠ CAUTION**

***Before pump operation, inspect all gasketed fasteners for looseness caused by gasket creep. Re-torque loose fasteners to prevent leakage. Follow recommended torques stated in this manual.***

**⚠ WARNING**

***Before maintenance or repair, shut off the compressed air line, bleed the pressure, and disconnect the air line from the pump. The discharge line may be pressurized and must be bled of its pressure.***

**⚠ WARNING**

***In the event of diaphragm rupture, pumped material may enter the air end of the pump, and be discharged into the atmosphere. If pumping a product which is hazardous or toxic, the air exhaust must be piped to an appropriate area for safe disposition.***

**⚠ WARNING**

***Take action to prevent static sparking. Fire or explosion can result, especially when handling flammable liquids. The pump, piping, valves, containers or other miscellaneous equipment must be grounded. (See page 28)***

**⚠ WARNING**

***This pump is pressurized internally with air pressure during operation. Always make certain that all bolting is in good condition and that all of the correct bolting is reinstalled during assembly.***

**⚠ WARNING**

***When used for toxic or aggressive fluids, the pump should always be flushed clean prior to disassembly.***

**⚠ WARNING**

***Before doing any maintenance on the pump, be certain all pressure is completely vented from the pump, suction, discharge, piping, and all other openings and connections. Be certain the air supply is locked out or made non-operational, so that it cannot be started while work is being done on the pump. Be certain that approved eye protection and protective clothing are worn all times in the vicinity of the pump. Failure to follow these recommendations may result in serious injury or death.***

**⚠ WARNING**

***Airborne particles and loud noise hazards.***

***Wear ear and eye protection.***

# Material Codes

## The Last 3 Digits of Part Number

| | |
|---|---|
| 000 | Assembly, sub-assembly; and some purchased items |
| 010 | Cast Iron |
| 012 | Powered Metal |
| 015 | Ductile Iron |
| 020 | Ferritic Malleable Iron |
| 025 | Music Wire |
| 080 | Carbon Steel, AISI B-1112 |
| 100 | Alloy 20 |
| 110 | Alloy Type 316 Stainless Steel |
| 111 | Alloy Type 316 Stainless Steel (Electro Polished) |
| 112 | Alloy C |
| 113 | Alloy Type 316 Stainless Steel (Hand Polished) |
| 114 | 303 Stainless Steel |
| 115 | 302/304 Stainless Steel |
| 117 | 440-C Stainless Steel (Martensitic) |
| 120 | 416 Stainless Steel (Wrought Martensitic) |
| 123 | 410 Stainless Steel (Wrought Martensitic) |
| 148 | Hardcoat Anodized Aluminum |
| 149 | 2024-T4 Aluminum |
| 150 | 6061-T6 Aluminum |
| 151 | 6063-T6 Aluminum |
| 152 | 2024-T4 Aluminum (2023-T351) |
| 154 | Almag 35 Aluminum |
| 155 | 356-T6 Aluminum |
| 156 | 356-T6 Aluminum |
| 157 | Die Cast Aluminum Alloy #380 |
| 158 | Aluminum Alloy SR-319 |
| 159 | Anodized Aluminum |
| 162 | Brass, Yellow, Screw Machine Stock |
| 165 | Cast Bronze, 85-5-5-5 |
| 166 | Bronze, SAE 660 |
| 170 | Bronze, Bearing Type, Oil Impregnated |
| 175 | Die Cast Zinc |
| 180 | Copper Alloy |
| 305 | Carbon Steel, Black Epoxy Coated |
| 306 | Carbon Steel, Black PTFE Coated |
| 307 | Aluminum, Black Epoxy Coated |
| 308 | Stainless Steel, Black PTFE Coated |
| 309 | Aluminum, Black PTFE Coated |
| 310 | PVDF Coated |
| 330 | Zinc Plated Steel |
| 331 | Chrome Plated Steel |
| 332 | Aluminum, Electroless Nickel Plated |
| 333 | Carbon Steel, Electroless Nickel Plated |
| 335 | Galvanized Steel |
| 336 | Zinc Plated Yellow Brass |
| 337 | Silver Plated Steel |
| 340 | Nickel Plated |
| 342 | Filled Nylon |
| 353 | Geolast; Color: Black |
| 354 | Injection Molded #203-40 Santoprene-Duro 40D +/-5; Color: RED |
| 355 | Thermal Plastic |
| 356 | Hytrel |
| 357 | Injection Molded Polyurethane |
| 358 | Urethane Rubber (Some Applications) (Compression Mold) |
| 359 | Urethane Rubber |
| 360 | Nitrile Rubber. Color coded: RED |
| 361 | FDA Accepted Nitrile |
| 363 | FKM (Fluorocarbon). Color coded: YELLOW |
| 364 | E.P.D.M. Rubber. Color coded: BLUE |
| 365 | Neoprene Rubber. Color coded: GREEN |
| 366 | Food Grade Nitrile |
| 368 | Food Grade EPDM |
| 370 | Butyl Rubber. Color coded: BROWN |
| 371 | Philthane (Tuftane) |
| 374 | Carboxylated Nitrile |
| 375 | Fluorinated Nitrile |
| 378 | High Density Polypropylene |
| 379 | Conductive Nitrile |
| 405 | Cellulose Fibre |
| 408 | Cork and Neoprene |
| 425 | Compressed Fibre |
| 426 | Blue Gard |
| 440 | Vegetable Fibre |
| 465 | Fibre |
| 500 | Delrin 500 |
| 501 | Delrin 570 |
| 502 | Conductive Acetal, ESD-800 |
| 503 | Conductive Acetal, Glass-Filled |
| 505 | Acrylic Resin Plastic |
| 506 | Delrin 150 |
| 520 | Injection Molded PVDF Natural color |
| 521 | Conductive PVDF |
| 540 | Nylon |
| 541 | Nylon |
| 542 | Nylon |
| 544 | Nylon Injection Molded |
| 550 | Polyethylene |
| 551 | Glass Filled Polypropylene |
| 552 | Unfilled Polypropylene |
| 553 | Unfilled Polypropylene |
| 555 | Polyvinyl Chloride |
| 556 | Black Vinyl |
| 557 | Conductive Polypropylene |
| 558 | Conductive HDPE |
| 559 | Glass-Filled Conductive Polypropylene |
| 570 | Rulon II |
| 580 | Ryton |
| 590 | Valox |
| 591 | Nylatron G-S |
| 592 | Nylatron NSB |
| 600 | PTFE (virgin material) Tetrafluorocarbon (TFE) |
| 601 | PTFE (Bronze and moly filled) |
| 602 | Filled PTFE |
| 603 | Blue Gylon |
| 604 | PTFE |
| 606 | PTFE |
| 607 | Envelon |
| 608 | Conductive PTFE |
| 610 | PTFE Integral Silicon |
| 611 | PTFE Integral FKM |
| 632 | Neoprene/Hytrel |
| 633 | FKM (Fluorocarbon)/PTFE |
| 634 | EPDM/PTFE |
| 635 | Neoprene/PTFE |
| 637 | PTFE, FKM (Fluorocarbon)/PTFE |
| 638 | PTFE, Hytrel/PTFE |
| 639 | Nitrile/TFE |
| 643 | Santoprene/EPDM |
| 644 | Santoprene/PTFE |
| 650 | Bonded Santoprene and PTFE |
| 654 | Santoprene Diaphragm, PTFE Overlay Balls and seals |
| 656 | Santoprene Diaphragm and Check Balls/EPDM Seats |
| 661 | EPDM/Santoprene |

Delrin and Hytrel are registered tradenames of E.I. DuPont.

Gylon is a registered tradename of Garlock, Inc.

Nylatron is a registered tradename of Polymer Corp.

Santoprene is a registered tradename of Monsanto Corp.

Rulon II is a registered tradename of Dixion Industries Corp.

Ryton is a registered tradename of Phillips Chemical Co.

Valox is a registered tradename of General Electric Co.

Warren Rupp, SANDPIPER, Portapump, Tranquilizers and SludgeMaser are registered tradenames of IDEX AODD, Inc.

# Composite Repair Parts Drawing

## AVAILABLE SERVICE AND CONVERSION KITS

**476-227-000** **AIR END KIT** (Use With Aluminum Center)
Air Valve Assembly, Pilot Valve Assembly, Seals, Bumpers, Gaskets, Plunger and O-rings.

**476-227-010** **AIR END KIT** (Use With Cast Iron Centers)

**476-227-110** **AIR END KIT** (Use With Stainless Steel Centers)

**476-170-558** **AIR END KIT** (Air Valve with Stroke Indicator Pin, Aluminum Center)
Seals, O-ring, Gaskets, Retaining Rings, Air Valve Sleeve and Spool Set, and Pilot Valve Assembly.

**476-182-360** **WET END KIT**
Nitrile Diaphragms, Balls, and Polyethylene Seats.

**476-182-354** **WET END KIT**
Santoprene Diaphragms, Balls and Polyethylene Seats.

**476-182-365** **WET END KIT**
Neoprene Diaphragms, Balls, and Polyethylene Seats.

**476-182-633** **WET END KIT**
FKM Diaphragms, PTFE Balls and Seats.

**476-182-635** **WET END KIT**
Neoprene Diaphragms, PTFE Overlay, Balls and Seats.

**476-182-364** **WET END KIT**
EPDM Diaphragms, Balls and UHMW Seats.

**476-182-654** **WET END KIT**
Santoprene Diaphragms, PTFE Overlay, PTFE Balls, PTFE Seats.

**476-182-659** **WETTED END KIT**
One-Piece Bonded PTFE/Nitrile Diaphragm, PTFE Balls, PTFE Seats.

**475-215-000** **MIDSECTION CONVERSION KIT**
(Replaces Aluminum Midsection With Cast Iron Components.) Air Inlet Cap, Intermediate Bracket, Inner Chambers and Inner Diaphragm Plates.

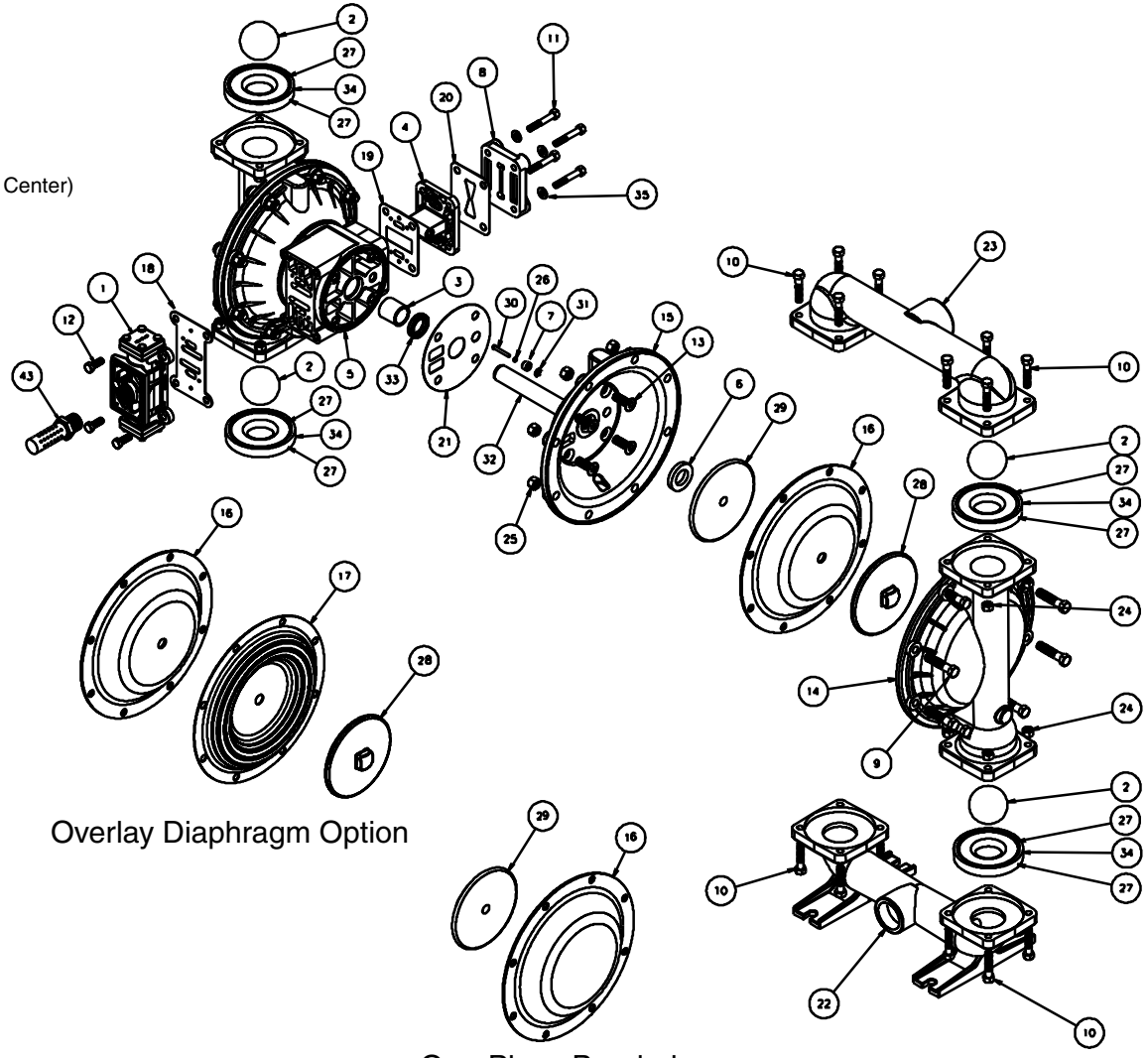

Overlay Diaphragm Option

One-Piece Bonded Diaphragm Option

**HARDWARE KITS**

475-205-330 Zinc Plated Capscrews, Washers, and Hex Nuts
475-205-115 Stainless Steel Capscrews, Washers, and Hex Nuts

****ELECTRONIC LEAK DETECTOR KITS**

032-040-000 100VAC
032-037-000 220VAC

****Note: Pumps equipped with these components are <u>not</u> ATEX compliant.**

# Composite Repair Parts List

## ATEX Compliant

| ITEM | PART NUMBER | DESCRIPTION | QTY |
|---|---|---|---|
| 1 | 031-140-000 | Air Valve Assembly w/Integral muffler (Cast Iron Centers Only) | 1 |
| | 031-141-000 | Air Valve Assembly (Cast Iron Centers Only) | 1 |
| | ⚠ 031-146-000 | Air Valve Assembly w/Integral muffler (Stroke Indicator Only) | 1 |
| | ⚠ 031-147-000 | Air Valve Assembly (Stroke Indicator Only) | 1 |
| | 031-173-000 | Air Valve Assembly w/Integral muffler | 1 |
| | 031-173-001 | Air Valve Assembly (with Stainless Steel Hardware) | 1 |
| | ⚠ 031-183-000 | Air Valve Assembly | 1 |
| | ⚠ 031-179-000 | Air Valve Assembly (Cast Iron or Stainless Steel Centers Only) | 1 |
| 2 | 050-005-354 | Ball, Check | 4 |
| | 050-005-360 | Ball, Check | 4 |
| | 050-005-360W | Ball, Weighted Check | 4 |
| | 050-005-363 | Ball, Check | 4 |
| | 050-005-364 | Ball, Check | 4 |
| | 050-005-365 | Ball, Check | 4 |
| | 050-005-365W | Ball, Weighted Check | 4 |
| | 050-010-600 | Ball, Check | 4 |
| 3 | 070-006-170 | Bushing | 2 |
| 4 | 095-110-000 | Pilot Valve Assembly | 1 |
| | 095-110-558 | Pilot Valve Assembly (Cast Iron Centers Only) | 1 |
| | 095-095-110 | Pilot Valve Assembly (Stainless Steel Centers Only) | 1 |
| 5 | 114-024-157 | Intermediate Bracket | 1 |
| | 114-024-010 | Intermediate Bracket | 1 |
| | 114-024-110 | Intermediate Bracket (Stainless Steel Centers Only) | 1 |
| 6 | 132-035-360 | Bumper, Diaphragm | 2 |
| 7 | 135-034-506 | Bushing, Plunger | 2 |
| 8 | 165-118-157 | Cap, Air Inlet Assembly | 1 |
| | 165-118-010 | Cap, Air Inlet Assembly | 1 |
| | 165-118-110 | Cap, Air Inlet Assembly (Stainless Steel Centers Only) | 1 |
| 9 | 170-060-115 | Capscrew, Hex Hd 7/16-14 X 2.00 | 16 |
| | 170-060-330 | Capscrew, Hex Hd 7/16-14 X 2.00 | 16 |
| 10 | 170-061-115 | Capscrew, Hex Hd 3/8-16 X 1.75 | 16 |
| | 170-061-330 | Capscrew, Hex Hd 3/8-16 X 1.75 | 16 |
| 11 | 170-069-115 | Capscrew, Hex Hd 5/16-18 X 1.75 | 4 |
| | 170-069-330 | Capscrew, Hex Hd 5/16-18 X 1.75 | 4 |
| 12 | 170-006-115 | Capscrew, Hex HD 3/8-16 X 1.00 | 4 |
| | 170-006-330 | Capscrew, Hex HD 3/8-16 X 1.00 | 4 |
| | 171-053-115 | Capscrew, Soc Hd 3/8-16 X 2.50 (Stroke Indicator Only) | 4 |
| | 171-053-330 | Capscrew, Soc Hd 3/8-16 X 2.50 (Stroke Indicator Only) | 4 |
| | 171-011-115 | Capscrew, Soc Hd 1/2-13 x 1.00 (Stainless Center) | 8 |
| 13 | 171-059-115 | Capscrew, Soc Hd 7/16-14 X 1.25 | 8 |
| | 171-059-330 | Capscrew, Soc Hd 7/16-14 X 1.25 | 8 |
| 14 | 196-169-156 | Chamber, Outer | 2 |
| | 196-169-010 | Chamber, Outer | 2 |
| | 196-169-110 | Chamber, Outer | 2 |
| 15 | 196-170-157 | Chamber, Inner | 2 |
| | 196-170-010 | Chamber, Inner | 2 |
| | 196-170-110 | Chamber, Inner | 2 |
| 16 | 286-099-354 | Diaphragm | 2 |
| | 286-099-360 | Diaphragm | 2 |
| | 286-099-363 | Diaphragm | 2 |
| | 286-099-364 | Diaphragm | 2 |
| | 286-099-365 | Diaphragm | 2 |
| 17 | 286-099-600 | Diaphragm, Overlay | 2 |
| | 286-113-000 | Diaphragm, One-Piece Bonded | 2 |
| 18 | 360-093-360 | Gasket, Air Valve | 1 |
| 19 | 360-114-360 | Gasket, Pilot Valve | 1 |
| 20 | 360-104-379 | Gasket, Air Inlet | 1 |
| 21 | 360-105-360 | Gasket, Inner Chamber | 2 |
| 22 | 518-151-156 | Manifold, Suction | 1 |
| | 518-151-156E | Manifold, Suction 1-1/2" BSP Tapered | 1 |
| | 518-151-010 | Manifold, Suction | 1 |
| | 518-151-010E | Manifold, Suction 1-1/ 2" BSP Tapered | 1 |
| | 518-151-110 | Manifold, Suction | 1 |
| | 518-151-110E | Manifold, Suction 1-1/ 2" BSP Tapered | 1 |
| 23 | 518-152-156 | Manifold, Discharge | 1 |
| | 518-152-156E | Manifold, Discharge 1-1/ 2" BSP Tapered | 1 |
| | 518-152-010 | Manifold, Discharge | 1 |
| | 518-152-010E | Manifold, Discharge 1-1/ 2" BSP Tapered | 1 |
| | 518-152-110 | Manifold, Discharge | 1 |
| | 518-152-110E | Manifold, Discharge 1-1/ 2" BSP Tapered | 1 |
| 24 | 545-005-115 | Nut, Hex 3/8-16 | 16 |
| | 545-005-330 | Nut, Hex 3/8-16 | 16 |
| 25 | 545-007-115 | Nut, Hex 7/16-14 | 16 |
| | 545-007-330 | Nut, Hex 7/16-14 | 16 |
| 26 | 560-001-379 | O-Ring | 2 |
| 27 | 560-084-360 | Seal (O-Ring) (See item 34) | 8 |
| | 560-084-363 | Seal (O-Ring) (See item 34) | 8 |
| | 560-084-364 | Seal (O-Ring) (See item 34) | 8 |
| | 560-084-365 | O-Ring | 8 |
| | 720-061-608 | Seal (O-Ring) (See item 34) | 8 |
| 28 | 612-039-157 | Plate, Outer Diaphragm Assembly | 2 |
| | 612-039-010 | Plate, Outer Diaphragm Assembly | 2 |
| | 612-097-110 | Plate, Outer Diaphragm Assembly | 2 |
| 29 | 612-195-157 | Plate, Inner Diaphragm | 2 |
| | 612-195-010 | Plate, Inner Diaphragm | 2 |
| | 612-217-150 | Plate, Inner Diaphragm (use with one-piece diaphragm) | 2 |
| 30 | 620-020-115 | Plunger, Actuator | 2 |
| 31 | 675-042-115 | Ring, Retaining | 2 |
| 32 | 685-059-120 | Rod, Diaphragm | 1 |
| 33 | 720-004-360 | Seal, Diaphragm Rod | 2 |
| 34 | 722-091-550 | Seat, Check Ball | 4 |
| | 722-091-080 | Seat, Check Ball (seals required see item 27) | 4 |
| | 722-091-110 | Seat, Check Ball (seals required see item 27) | 4 |
| | 722-091-150 | Seat, Check Ball (seals required see item 27) | 4 |
| | 722-091-600 | Seat, Check Ball | 4 |
| 35 | 901-038-115 | Washer, Flat 5/16 | 4 |
| | 901-038-330 | Washer, Flat 5/16 | 4 |
| 36 | 901-048-115 | Washer, Flat 3/8 (Stroke Indicator Only) | 4 |
| | 901-048-330 | Washer, Flat 3/8 (Stroke Indicator Only) | 4 |
| 37 | 570-009-363 | Pad, Wear (use with #286-099-363) | 2 |
| ⚠43 | 530-033-000 | Metal Muffler (for other muffler options see pg. 24) | 1 |

**Parts not shown used with Raised Face Flange Porting Option.**

| | | |
|---|---|---|
| 170-035-330 | Hex Cap Screw | 4 |
| 326-051-080 | Mounting Bracket | 2 |
| 334-113-110 | 1½" Raised Face, 150# ANSI Flange | 2 |
| 538-036-110 | Pipe Nipple 1½" NPT x 2" | 2 |
| 545-005-330 | Hex Nut | 4 |
| 900-006-330 | Lock Washer | 4 |
| 901-022-330 | Flat Washer | 8 |

# Air Valve Servicing, Assembly Drawing & Parts List (Use With Aluminum Centers Only)

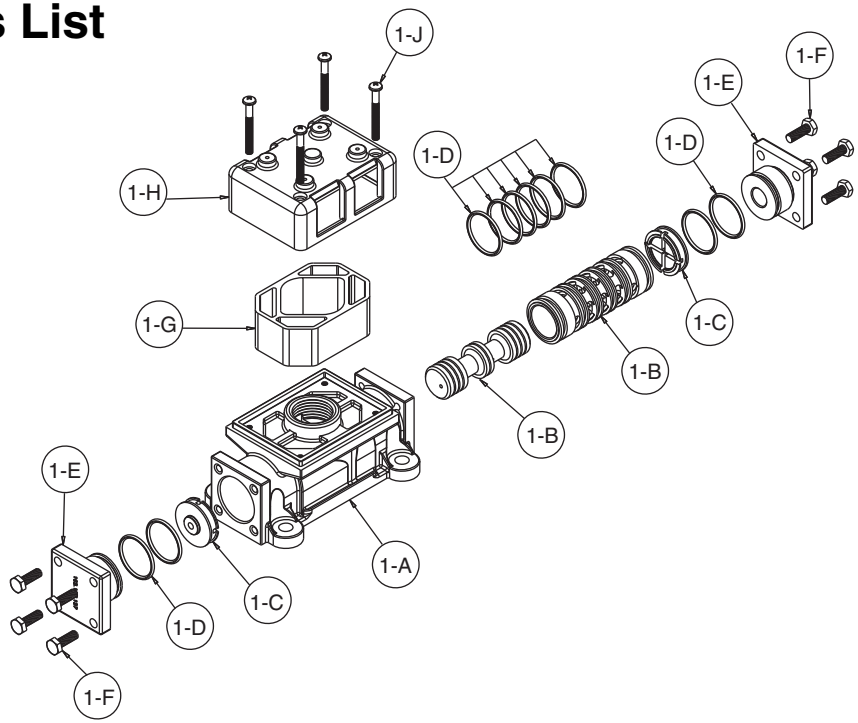


****AIR VALVE ASSEMBLY PARTS LIST**

| Item | Part Number | Description | Qty |
|---|---|---|---|
| **1** | **031-173-000** | **Air Valve Assembly** | **1** |
| 1-A | 095-109-157 | Body, Air Valve | 1 |
| 1-B | 031-139-000 | Sleeve and Spool Set | 1 |
| 1-C | 132-029-357 | Bumper | 2 |
| 1-D | 560-020-360 | O-Ring | 10 |
| 1-E | 165-127-157 | Cap, End | 2 |
| 1-F | 170-032-330 | Hex Head Capscrew 1/4-20 x .75 | 8 |
| 1-G | 530-028-550 | Muffler | 1 |
| 1-H | 165-096-551 | Muffler Cap | 1 |
| 1-J | 706-026-330 | Machine Screw | 4 |

****AIR VALVE ASSEMBLY PARTS LIST**

| | | | |
|---|---|---|---|
| 1 | 031-173-001 | Air Valve Assembly | 1 |
| Consists of all components above except: | | | |
| 1-F | 170-032-115 | Hex Head Capscrew 1/4-20 x .75 | 8 |
| 1-J | 706-026-115 | Machine Screw | 4 |

****Note: Pumps equipped with this valve assembly are <u>not</u> ATEX compliant.**

**AIR DISTRIBUTION VALVE SERVICING**

To service the air valve first shut off the compressed air, bleed pressure from the pump, and disconnect the air supply line from the pump.

**Step #1:** See COMPOSITE REPAIR PARTS DRAWING.

Using a 9/16" wrench or socket, remove the four hex capscrews (items 12). Remove the air valve assembly from the pump.

Remove and inspect gasket (item 18) for cracks or damage. Replace gasket if needed.

**Step #2:** Disassembly of the air valve.

Using a 7/16" wrench or socket, remove the eight hex capscrews (items 1-F) that fasten the end caps to the valve body. Next remove the two end caps (items 1-E). Inspect the two o-rings (items 1-D) on each end cap for damage or wear. Replace the bumpers as needed.

Remove the bumpers (items 1-C). Inspect the bumpers for damage or wear. Replace the bumpers as needed.

Remove the spool (part of item 1-B) from the sleeve. Be careful not to scratch or damage the outer diameter of the spool. Wipe spool with a soft cloth and inspect for scratches or wear.

Inspect the inner diameter of the sleeve (part of item 1-B) for dirt, scratches, or other contaminants. Remove the sleeve if needed and replace with a new sleeve and spool set (item 1-B).

**Step #3:** Reassembly of the air valve.

Install one bumper (item 1-C) and one end cap (item 1-E), with two o-rings (items 1-D), and fasten with four hex capscrews (items 1-F) to the valve body (item 1-A).

Remove the new sleeve an spool set (item 1-B) from the plastic bag. Carefully remove the spool from the sleeve. Install the six o-rings (item 1-D) into the six grooves on the sleeve. Apply a light coating of grease to the o-rings before installing the sleeve into the valve body (item 1-A), align the slots in the sleeve with the slots in the valve body. Insert the spool into the sleeve. Be careful not to scratch or damage the spool during installation. Carefully insert the sleeve into the bumper and end cap (with o-rings) and fasten with the remaining hex capscrews.

Fasten the air valve assembly (item 1) and gasket to the pump. Connect the compressed air line to the pump. The pump is now ready for operation.

**⚠ IMPORTANT**

***Read these instructions completely, before installation and start-up. It is the responsibility of the purchaser to retain this manual for reference. Failure to comply with the recommendations stated in this manual will damage the pump, and void factory warranty.***

# Air Valve Servicing, Assembly Drawing & Parts List

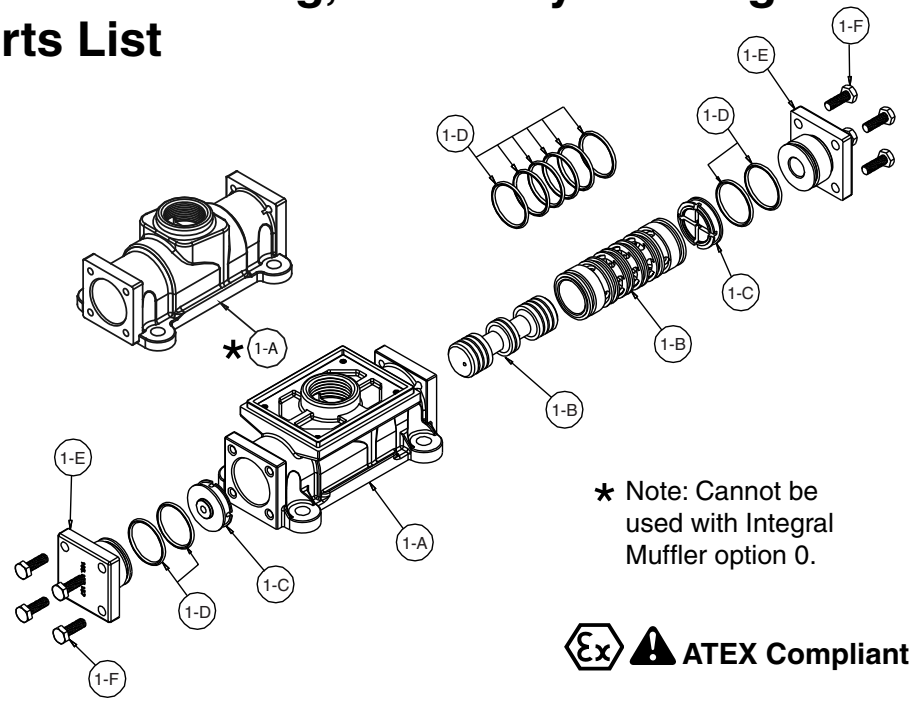


* Note: Cannot be used with Integral Muffler option 0.

**ATEX Compliant**

**AIR VALVE ASSEMBLY PARTS LIST**
**(Use w/Aluminum centers only)**

| Item | Part Number | Description | Qty |
|---|---|---|---|
| **1** | **031-183-000** | **Air Valve Assembly** | **1** |
| 1-A | 095-109-157 | Body, Air Valve | 1 |
| 1-B | 031-139-000 | Sleeve and Spool Set | 1 |
| 1-C | 132-029-357 | Bumper | 2 |
| 1-D | 560-020-360 | O-Ring | 10 |
| 1-E | 165-127-157 | Cap, End | 2 |
| 1-F | 170-032-330 | Hex Head Capscrew 1/4-20 x .75 | 8 |

**AIR VALVE ASSEMBLY PARTS LIST**

| | | | |
|---|---|---|---|
| 1 | 031-183-001 | Air Valve Assembly | 1 |
| Consists of all components above except: | | | |
| 1-F | 170-032-115 | Hex Head Capscrew 1/4-20 x .75 | 8 |

**AIR VALVE ASSEMBLY PARTS LIST**
**(Use w/Cast Iron and Stainless Steel centers only)**

| Item | Part Number * | Description | Qty |
|---|---|---|---|
| **1** | **031-179-000** | **Air Valve Assembly** | **1** |
| 1-A | 095-109-110 | Body, Air Valve | 1 |
| 1-B | 031-139-000 | Sleeve and Spool Set | 1 |
| 1-C | 132-029-357 | Bumper | 2 |
| 1-D | 560-020-379 | O-Ring | 10 |
| 1-E | 165-127-110 | Cap, End | 2 |
| 1-F | 170-032-115 | Hex Head Capscrew 1/4-20 x .75 | 8 |

**AIR DISTRIBUTION VALVE SERVICING**

To service the air valve first shut off the compressed air, bleed pressure from the pump, and disconnect the air supply line from the pump.

**Step #1:** See COMPOSITE REPAIR PARTS DRAWING.

Using a 9/16" wrench or socket, remove the four hex capscrews (items 12). Remove the air valve assembly from the pump.

Remove and inspect gasket (item 18) for cracks or damage. Replace gasket if needed.

**Step #2:** Disassembly of the air valve.

Using a 7/16" wrench or socket, remove the eight hex capscrews (items 1-F) that fasten the end caps to the valve body. Next remove the two end caps (items 1-E). Inspect the two o-rings (items 1-D) on each end cap for damage or wear. Replace the o-rings as needed.

Remove the bumpers (items 1-C). Inspect the bumpers for damage or wear. Replace the bumpers as needed.

Remove the spool (part of item 1-B) from the sleeve. Be careful not to scratch or damage the outer diameter of the spool. Wipe spool with a soft cloth and inspect for scratches or wear.

Inspect the inner diameter of the sleeve (part of item 1-B) for dirt, scratches, or other contaminants. Remove the sleeve if needed and replace with a new sleeve and spool set (item 1-B).

**Step #3:** Reassembly of the air valve.

Install one bumper (item 1-C) and one end cap (item 1-E), with two o-rings (items 1-D), and fasten with four hex capscrews (items 1-F) to the valve body (item 1-A).

Remove the new sleeve an spool set (item 1-B) from the plastic bag. Carefully remove the spool from the sleeve. Install the six o-rings (item 1-D) into the six grooves on the sleeve. Apply a light coating of grease to the o-rings before installing the sleeve into the valve body (item 1-A), align the slots in the sleeve with the slots in the valve body. Insert the spool into the sleeve. Be careful not to scratch or damage the spool during installation. Carefully insert the sleeve into the bumper and end cap (with o-rings) and fasten with the remaining hex capscrews.

Fasten the air valve assembly (item 1) and gasket to the pump. Connect the compressed air line to the pump. The pump is now ready for operation.

**IMPORTANT**

***Read these instructions completely, before installation and start-up. It is the responsibility of the purchaser to retain this manual for reference. Failure to comply with the recommendations stated in this manual will damage the pump, and void factory warranty.***

# Air Valve with Stroke Indicator Assembly Drawing & Parts List

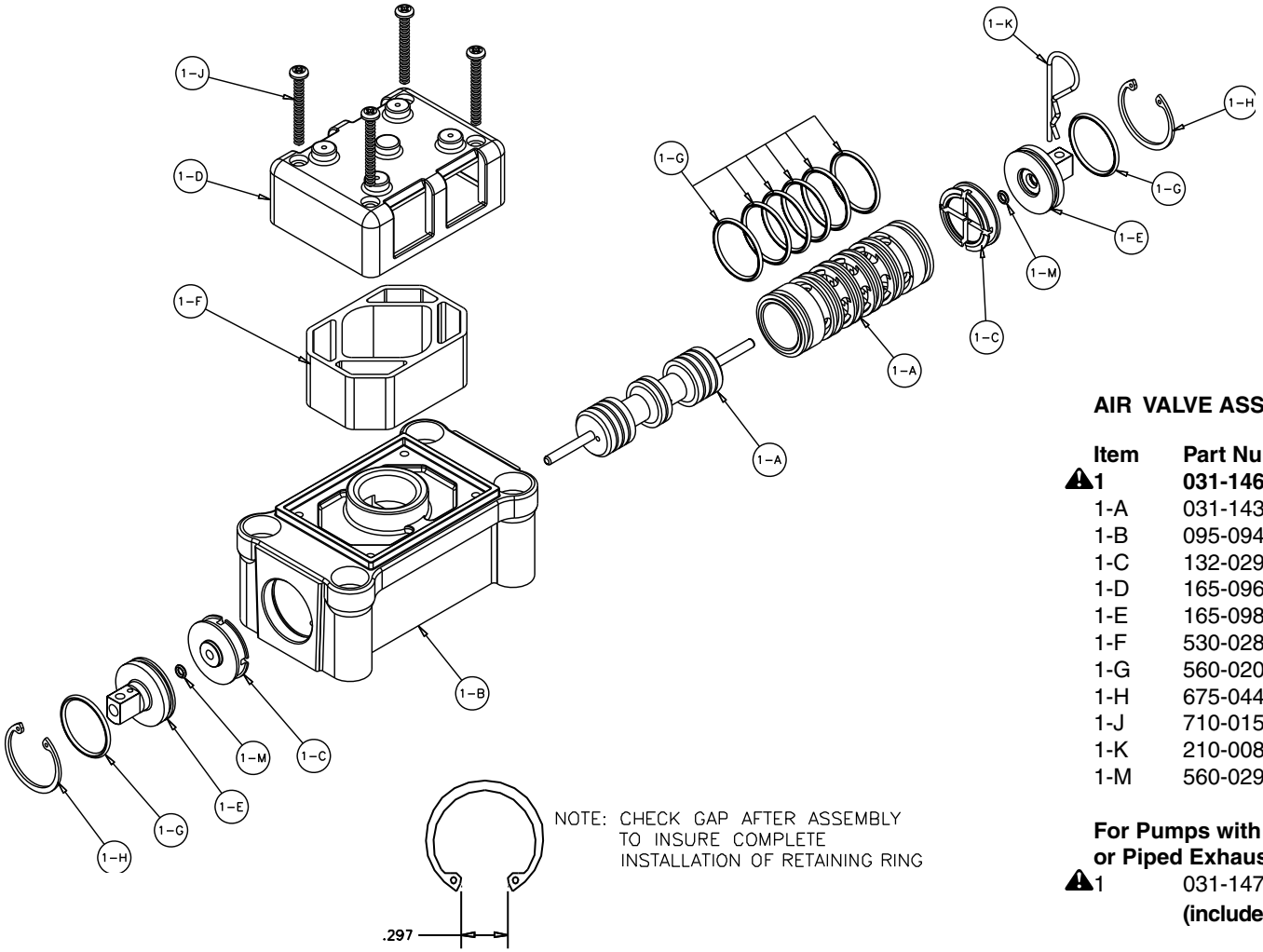


**AIR VALVE ASSEMBLY PARTS LIST**

| Item | Part Number | Description | Qty |
|---|---|---|---|
| **⚠1** | **031-146-000** | **Air Valve Assembly** | **1** |
| 1-A | 031-143-000 | Sleeve and Spool Set | 1 |
| 1-B | 095-094-559 | Body, Air Valve | 1 |
| 1-C | 132-029-552 | Bumper | 2 |
| 1-D | 165-096-559 | Cap, Muffler | 1 |
| 1-E | 165-098-147 | Cap, End | 2 |
| 1-F | 530-028-550 | Muffler | 1 |
| 1-G | 560-020-360 | O-Ring | 8 |
| 1-H | 675-044-115 | Ring, Retaining | 2 |
| 1-J | 710-015-115 | Screw, Self Tapping | 4 |
| 1-K | 210-008-330 | Clip, Safety | 1 |
| 1-M | 560-029-360 | O-Ring | 2 |

**For Pumps with Alternate Mesh, Sound Dampening Mufflers or Piped Exhaust:**

| | | | |
|---|---|---|---|
| ⚠1 | 031-147-000 | Air Valve Assembly | 1 |
| | **(includes all items on 031-146-000 minus 1-D, 1-F, & 1-J).** | | |

**ATEX Compliant**

## AIR DISTRIBUTION VALVE WITH STROKE INDICATOR OPTION SERVICING

To service the air valve first shut off the compressed air supply, bleed the pressure from the pump, and disconnect the air supply line from the pump.

**Step #1:** See COMPOSITE REPAIR PARTS DRAWING.

Using a 5/16" Allen wrench, remove the four hex socket capscrews (item 12) and four flat washers (item 36). Remove the air valve assembly from the pump.

Remove and inspect gasket (item 18) for cracks or damage. Replace gasket if needed.

**Step #2:** Disassembly of the air valve.

To access the internal air valve components first remove the two retaining rings (item 1-H) from each end of the air valve assembly using clip ring pliers.

Next remove the two end caps (item 1-E). Inspect the o-ring (items 1-G) and 1-M) for cuts or wear. Replace the o-rings if necessary.

Remove the two bumpers (item 1-C). Inspect the bumpers for cut, wear or abrasion. Replace if necessary.

Remove the spool (part of item 1-A) from the sleeve. Be careful not to scratch or damage the outer diameter of the spool. Wipe spool with a soft cloth and inspect for scratches or wear.

Inspect the inner diameter of the sleeve (part of item 1-A) for dirt, scratches, or other contaminants. Remove the sleeve if needed and replace with a new sleeve and spool set (item 1-A).

**Step #3:** Reassembly of the air valve.

Install one bumper (item 1-C) and one end cap (item 1-E) with o-rings (item 1-G and 1-M) into one end of the air valve body (item 1-B). Install one retaining ring (item 1-H), into the groove on the same end. Insert the safety clip (item 1-K) through the smaller unthreaded hole in the endcap.

Remove the new sleeve and spool set (item 1-A) from the plastic bag. Carefully remove the spool from the sleeve. Install the six o-rings (item 1-G) into the six grooves on the sleeve. Apply a light coating of grease to the o-rings before installing the sleeve into the valve body (item 1-B). Align the slots in the sleeve with the slots in the valve body. Insert the spool into the sleeve. Be careful not to scratch or damage the spool during installation. Push the spool in until the pin touches the safety clip on the opposite end.

Install the remaining bumper, end cap with o-rings and retaining ring.

Fasten the air valve assembly (item 1) and gasket (item 18) to the pump.

Connect the compressed air line to the pump. Remove the safety clip. The pump is now ready for operation.

**⚠ IMPORTANT**

***Read these instructions completely, before installation and start-up. It is the responsibility of the purchaser to retain this manual for reference. Failure to comply with the recommendations stated in this manual will damage the pump, and void factory warranty.***

# Solenoid Shifted Air Valve Drawing

**SOLENOID SHIFTED AIR VALVE PARTS LIST**
(Includes all items used on Composite Repair Parts List except as shown)

| Item | Part Number | Description | Qty |
|---|---|---|---|
| 38 | 893-097-000 | Solenoid Valve, NEMA4 | 1 |
| 39 | 219-001-000 | Solenoid Coil, 24VDC | 1 |
| | 219-004-000 | Solenoid Coil, 24VAC/12VDC | 1 |
| | 219-002-000 | Solenoid Coil, 120VAC | 1 |
| | 219-003-000 | Solenoid Coil, 240VAC | 1 |
| 40 | 241-001-000 | Connector, conduit | 1 |
| | 241-003-000 | Conduit Connector with Suppression Diode (DC Only) | 1 |
| 41 | 170-029-330 | Capscrew, Hex HD 5/16-18 x 1.50 | 4 |
| 42 | 618-051-150 | Plug | 2 |

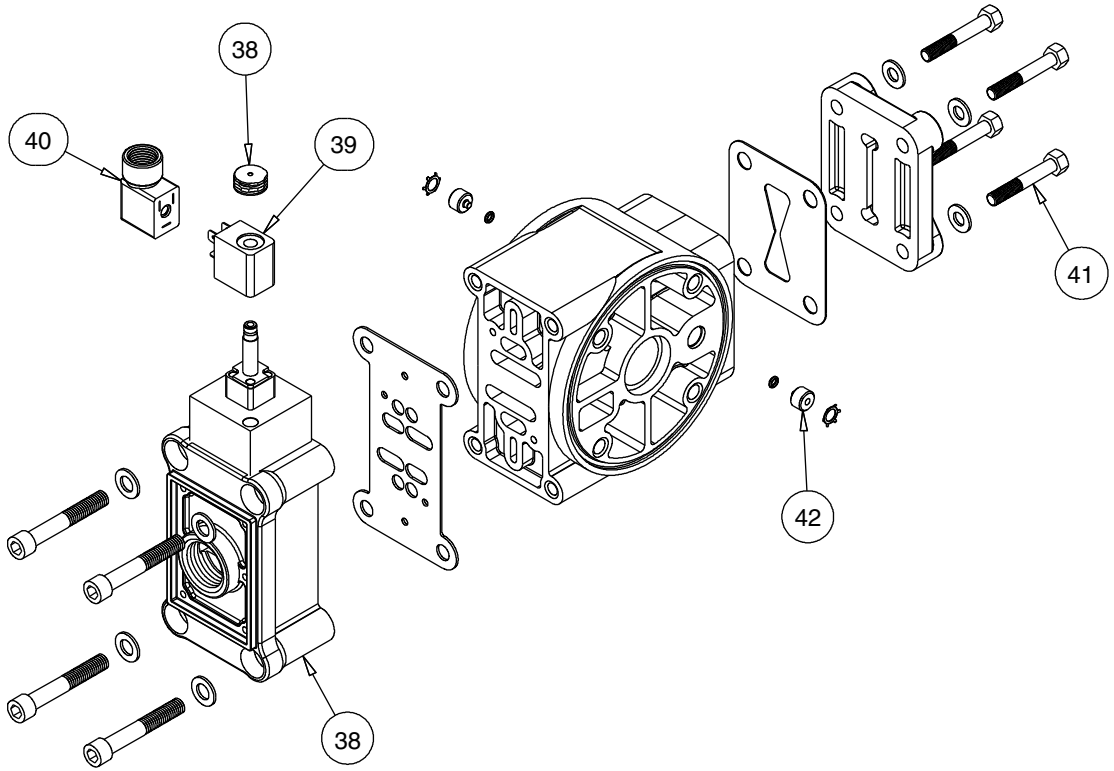


FM APPROVED IEC EEX m T4

△ ***For Explosion Proof Solenoid Coils used in North America and outside the European Union.***

| | | | |
|---|---|---|---|
| 39 | 219-009-001 | Solenoid Coil, 120VAC 60 Hz | 1 |
| | 219-009-002 | Solenoid Coil, 240VAC 60 Hz | 1 |
| | 219-009-003 | Solenoid Coil, 12VDC | 1 |
| | 219-009-004 | Solenoid Coil, 24VDC | 1 |
| | 219-009-005 | Solenoid Coil, 110VAC 50 Hz | 1 |
| | 219-009-006 | Solenoid Coil, 230VAC 50 Hz | 1 |

*Note: Item 40 (Conduit Connector) is not required*

II 2G EEx m c T5
II 2D c IP65 T100°C

* ◆ ***For Explosion Proof Solenoid Coils used in the European Union***

| | | | |
|---|---|---|---|
| 39 | 219-011-001 | Solenoid Coil, 12 VDC, 3.3W / 0, 531A...0, 014A | 1 |
| | 219-011-002 | Solenoid Coil, 24 VDC, 3.3W / 0, 531A...0, 014A | 1 |
| | 219-011-003 | Solenoid Coil, 110/120 VAC, 3.4W / 0, 212A...0, 015A | 1 |
| | 219-011-004 | Solenoid Coil, 220/240 VAC, 3.4W / 0, 212A...0, 015A | 1 |

*Note: Item 40 (Conduit Connector) is not required*

## *Special Conditions For Safe Use

A fuse corresponding to its rated current (max. $3*I_{rat}$ according IEC 60127-2-1) or a motor protecting switch with short-circuit and thermal instantaneous tripping (set to rated current) shall be connected in series to each solenoid as short circuit protection. For very low rated currents of the solenoid the fuse of lowest current value according to the indicated IEC standard will be sufficient. The fuse may be accommodated in the associated supply unit or shall be separately arranged. The rated voltage to the fuse shall be equal to or greater than the stated rated voltage of the magnet coil. The breakage capacity of the fuse-link shall be as high as or higher than the maximum expected short circuit current at the location of the installation (usually 1500 A). A maximum permissible ripple of 20% is valid for all magnets of direct-current design.

## SOLENOID SHIFTED AIR DISTRIBUTION VALVE OPTION

Warren Rupp's solenoid shifted, air distribution valve option utilizes electrical signals to precisely control your SANDPIPER's speed. The solenoid coil is connected to the Warren Rupp Solenoid Rate Controller/Batch Control, or a customer - supplied control. Compressed air provides the pumping power, while electrical signals control pump speed (pumping rate).

## OPERATION

The Solenoid Shifted SANDPIPER has a solenoid operated, air distribution valve in place of the standard SANDPIPER's pilot operated, air distribution valve. Where a pilot valve is normally utilized to cycle the pump's air distribution valve, an electric solenoid is utilized. As the solenoid is powered, one of the pump's air chambers is pressurized while the other chamber is exhausted. When electric power is turned off, the solenoid shifts and the pressurized chamber is exhausted while the other chamber is pressurized. By alternately applying and removing power to the solenoid, the pump cycles much like a standard SANDPIPER pump, with one exception. This option provides a way to precisely control and monitor pump speed.

## BEFORE INSTALLATION

Before wiring the solenoid, make certain it is compatible with your system voltage.

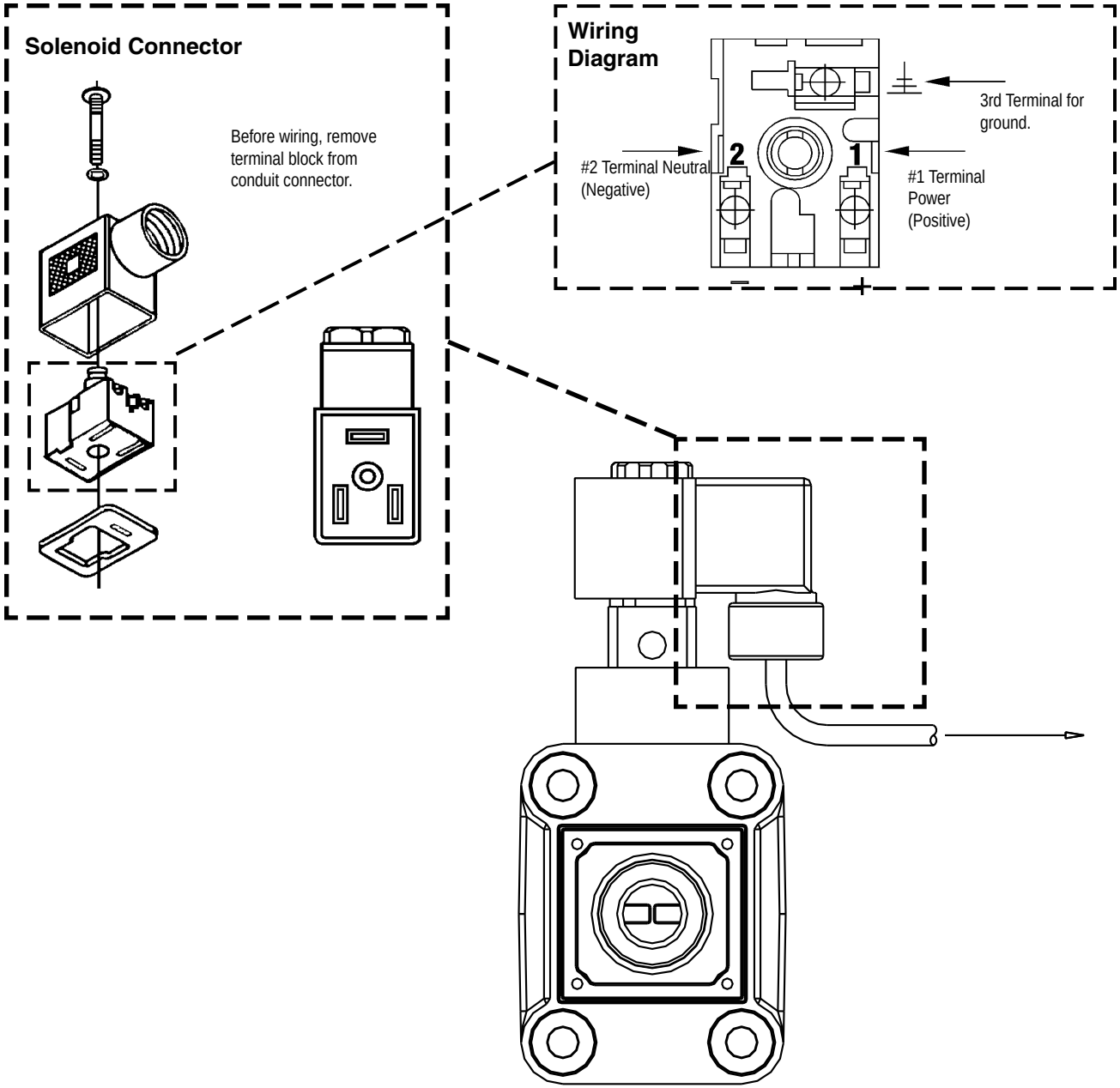

# Diaphragm Service Drawing, with Overlay

# Diaphragm Service Drawing, Non-Overlay

# One-Piece Bonded * DiaphragmService Drawing

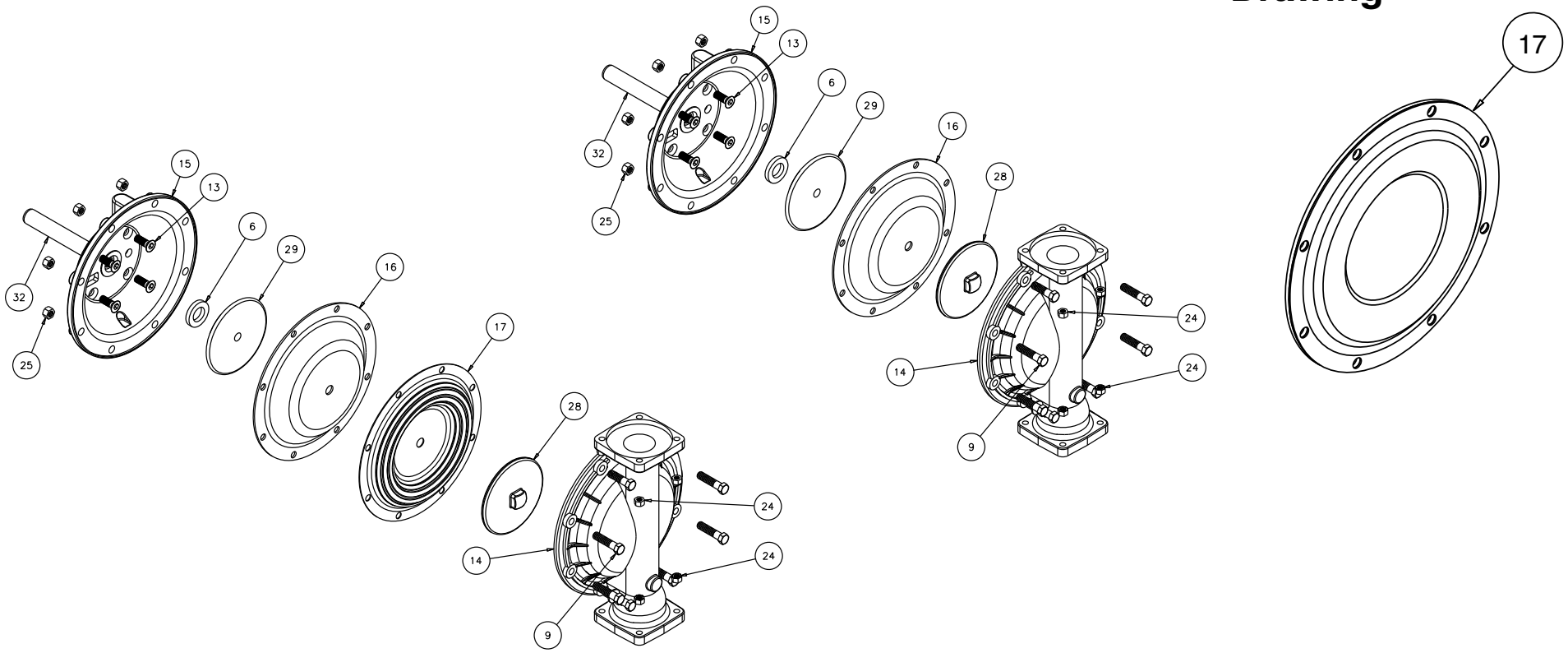


***AVAILABLE FOR FIELD CONVERSION FROM OVERLAY TO ONE-PIECE BONDED DIAPHRAGM KITS:**

| | | |
|---|---|---|
| **Kit:** | **475-254-000** | |
| 2 | 286-113-000 | One-Piece Diaphragm |
| 2 | 612-217-150 | Inner Plates |

## DIAPHRAGM SERVICING

To service the diaphragms first shut off the suction, then shut off the discharge lines to the pump. Shut off the compressed air supply, bleed the pressure from the pump and disconnect the air supply line from the pump. Drain any remaining liquid from the pump.

**Step #1:** See the pump assembly drawing and the diaphragm servicing illustration.

Using a 1/2" wrench or socket, remove the 16 capscrews (item 9) that fasten the manifolds (items 22 & 23) to the outer chambers (item 14).

**Step #2:** Removing outer chambers.

Using a 1/2" wrench or socket, remove the 16 capscrews (item 9), that fasten the outer chambers (item 13), diaphragms (item 14) and intermediate (item 5) together.

**Step #3:** Removing the diaphragms and diaphragm plates.

Use a 7/8" wrench or six point socket to remove the outer diaphragm plate assemblies, diaphragms (item 16) and inner diaphragm plates (item 29) from the diaphragm rod (item 32) by turning counterclockwise. Inspect the diaphragm for cuts, punctures, abrasive wear or chemical attack. Replace the diaphragms if necessary. DO NOT USE A WRENCH ON THE DIAPHRAGM ROD. FLAWS ON THE SURFACE MAY DAMAGE BEARINGS AND SEALS.

**Step #4:** Assembling the diaphragm and diaphragm plates to the diaphragm rod.

Push the threaded stud of one outer diaphragm plate assembly through the center of one diaphragm and through one inner diaphragm plate. Install the diaphragm with the natural bulge facing away from the diaphragm rod and make sure the radius on the inner diaphragm plate is towards the diaphragm, as indicated on the diaphragm servicing illustration. Thread the assembly onto the diaphragm rod, leaving loose.

**Step #5:** Installing the diaphragm and rod assembly to the pump.

Make sure the bumper (item 6) is installed over the diaphragm rod. Insert rod into pump.

On the opposite side of the pump, pull the diaphragm rod out as far as possible. Make sure the second bumper is installed over the diaphragm rod.

Push the threaded stud of the other outer diaphragm plate assembly through the center of the other diaphragm and through the other inner diaphragm plate. Make sure the radius on the inner diaphragm plate is towards the diaphragm. Thread the assembly onto the diaphragm rod. Use a 7/8" wrench or socket to hold one outer diaphragm plate. Then, use a torque wrench to tighten the other outer diaphragm plate to the diaphragm rod to 500 in. lbs. (56.5 Newton meters).

Align one diaphragm with the intermediate and install the outer chamber to the pump using the 8 capscrews. Tighten the opposite diaphragm plate until the holes in the diaphragm align with the holes in the intermediate. Then, install the other outer chamber using the 8 capscrews.

**Step #6:** Reinstall the manifolds to the pump using the 16 capscrews.

The pump is now ready to be reinstalled, connected and returned to operation.

## OVERLAY DIAPHRAGM SERVICING

The overlay diaphragm (item 17) is designed to fit over the exterior of the standard diaphragm (item 16).

Follow the same procedures described for the standard diaphragm for removal and installation, except tighten the outer diaphragm plate assembly, diaphragms and inner diaphragm plate to the diaphragm rod to 500 in. lbs. (56.5 Newton meters).

**One-Piece Bonded DIAPHRAGM SERVICING** (Bonded PTFE with integral plate)

The one-piece bonded diaphragm (item 17) has a threaded stud installed in the integral plate at the factory. The inner diaphragm plate has a through hole instead of a threaded hole.

**⚠ IMPORTANT**

***Read these instructions completely, before installation and start-up. It is the responsibility of the purchaser to retain this manual for reference. Failure to comply with the recommendations stated in this manual will damage the pump, and void factory warranty.***

Place the inner plate over the diaphragm stud and thread the first diaphragm / inner plate onto the diaphragm rod only until the inner plate contacts the rod. Do not tighten. A small amount of grease may be applied between the inner plate and the diaphragm to facilitate assembly.

Insert the diaphragm / rod assembly into the pump and install the outer chamber. Turn the pump over and thread the second diaphragm / inner plate onto the diaphragm rod. Turn the diaphragm until the inner plate contacts the rod and hand tighten the assembly. Continue tightening until the bolt holes align with the inner chamber holes. DO NOT LEAVE THE ASSEMBLY LOOSE.

# Pilot Valve Servicing, Assembly Drawing & Parts List

**PILOT VALVE ASSEMBLY PARTS LIST**

| ITEM | PART NUMBER | DESCRIPTION | QTY |
|---|---|---|---|
| 4 | 095-110-000 | Pilot Valve Assembly | 1 |
| 4-A | 095-095-157 | Valve Body | 1 |
| 4-B | 755-052-000 | Sleeve (With O-rings) | 1 |
| 4-C | 560-033-379 | O-ring (Sleeve) | 6 |
| 4-D | 775-055-000 | Spool (With O-rings) | 1 |
| 4-E | 560-023-379 | O-ring (Spool) | 3 |
| 4-F | 675-037-080 | Retaining Ring | 1 |

**FOR PUMPS WITH CAST IRON CENTER SECTION**

| ITEM | PART NUMBER | DESCRIPTION | QTY |
|---|---|---|---|
| 4 | 095-110-558 | Pilot Valve Assembly | 1 |
| 4-A | 095-095-558 | Valve Body | 1 |

(includes all other items used on 095-110-000)

**FOR PUMPS WITH STAINLESS STEEL CENTER SECTION**

| ITEM | PART NUMBER | DESCRIPTION | QTY |
|---|---|---|---|
| 4 | 095-110-110 | Pilot Valve Assembly | 1 |
| 4-A | 095-095-110 | Valve Body | 1 |

(includes all other items used on 095-110-000)

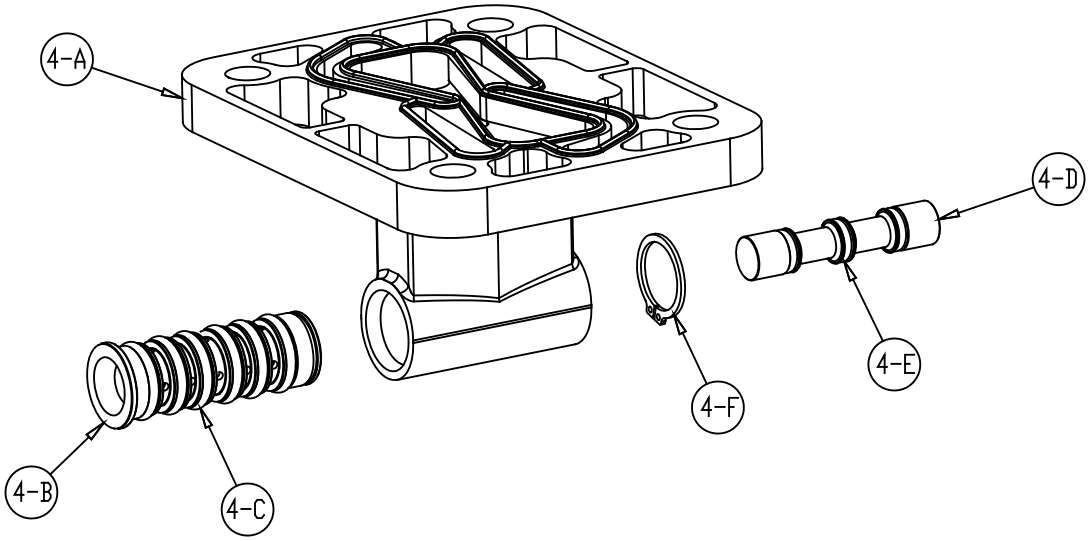


**PILOT VALVE SERVICING**

To service the pilot valve first shut off the compressed air supply, bleed the pressure from the pump, and disconnect the air supply line from the pump.

**STEP #1:** See pump assembly drawing.

Using a 1/2" wrench or socket, remove the four capscrews (item 11). Remove the air inlet cap (item 8) and air inlet gasket (item 20). The pilot valve assembly (item 4) can now be removed for inspection and service.

**STEP #2:** Disassembly of the pilot valve.

Remove the pilot valve spool (item 4-D). Wipe clean and inspect spool and o-rings for dirt, cuts or wear. Replace the o-rings and spool if necessary.

Remove the retaining ring (item 4-F) from the end of the sleeve (item 4-B) and remove the sleeve from the valve body (item 4-A). Wipe clean and inspect sleeve and o-rings for dirt, cuts or wear. Replace the o-rings and sleeve if necessary.

**STEP #3:** Re-assembly of the pilot valve.

Generously lubricate outside diameter of the sleeve and o-rings. Then carefully insert sleeve into valve body. Take CAUTION when inserting sleeve, not to shear any o-rings. Install retaining ring to sleeve. Generously lubricate outside diameter of spool and o-rings. Then carefully insert spool into sleeve. Take CAUTION when inserting spool, not to shear any o-rings. Use BP-LS-EP-2 multipurpose grease, or equivalent.

**STEP #4:** Re-install the pilot valve assembly into the intermediate.

Be careful to align the ends of the pilot valve stem between the plunger pins when inserting the pilot valve into the cavity of the intermediate.

Re-install the gasket, air inlet cap and capscrews. Connect the air supply to the pump. The pump is now ready for operation.

**ACTUATOR PLUNGER SERVICING**

To service the actuator plunger first shut off the compressed air supply, bleed the pressure from the pump, and disconnect the air supply line from the pump.

**Step #1:** See PUMP ASSEMBLY DRAWING.

Using a 1/2" wrench or socket, remove the four capscrews (items 11). Remove the air inlet cap (item 8) and air inlet gasket (item 18). The pilot valve assembly (item 4) can now be removed.

**Step #2:** Inspect the actuator plungers.

See ILLUSTRATION AT RIGHT.

The actuator plungers (items 30) can be reached through the pilot valve cavity in the intermediate assembly (item 5).

Remove the plungers (item 30) from the bushings (item 7) in each end of the cavity. Inspect the installed o-ring (items 26) for cuts and/or wear. Replace the o-rings if necessary. Apply a light coating of grease to each o-ring and re-install the plungers in to the bushings. Push the plungers in as far as they will go.

To remove the bushings (item 7), first remove the retaining rings (item 31) by using a flat screwdriver. **NOTE**: It is recommended that new retaining rings be installed.

**Step #3:** Re-install the pilot valve assembly into the intermediate assembly.

Be careful to align the ends of the stem between the plungers when inserting the stem of the pilot valve into the cavity of the intermediate.

Re-install the gasket (item 18), air inlet cap (item 8) and capscrews (item 11).

Connect the air supply to the pump. The pump is now ready for operation.

## ACTUATOR PLUNGER DRAWING

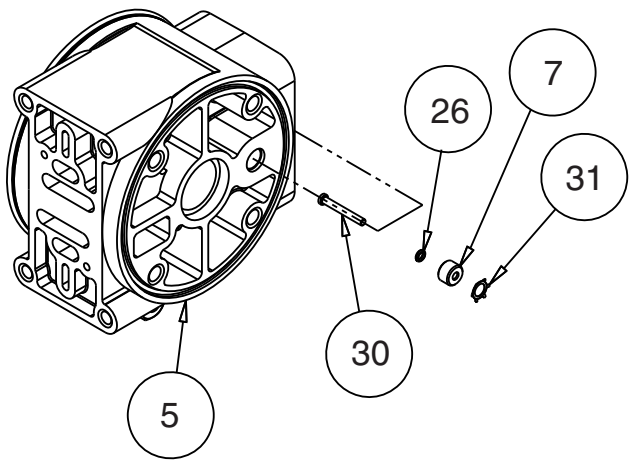


**⚠ IMPORTANT**

***Read these instructions completely, before installation and start-up. It is the responsibility of the purchaser to retain this manual for reference. Failure to comply with the recommendations stated in this manual will damage the pump, and void factory warranty.***

## CHECK VALVE SERVICING

Before servicing the check valve components, first shut off the suction line and then the discharge line to the pump. Next, shut off the compressed air supply, bleed air pressure from the pump, and disconnect the air supply line from the pump. Drain any remaining fluid from the pump. The pump can now be removed for service.

To access the check valve components, remove the manifold (item 23 or item 22 not shown). Use a 1/2" wrench or socket to remove the fasteners. Once the manifold is removed, the check valve components can be seen.

Inspect the check balls (items 2) for wear, abrasion, or cuts on the spherical surface. The check valve seats (item 34) should be inspected for cuts, abrasive wear, or embedded material on the surfaces of both the external and internal chambers. The spherical surface of the check balls must seat flush to the surface of the check valve seats for the pump to operate to peak efficiency. Replace any worn or damaged parts as necessary.

Re-assemble the check valve components. The seat should fit into the counter bore of the outer chamber.

The pump can now be reassembled, reconnected and returned to operation.

## METALLIC SEATS

Two o-rings (or conductive PTFE seals) (item 27) are required for metallic seats.

# Check Valve Drawing

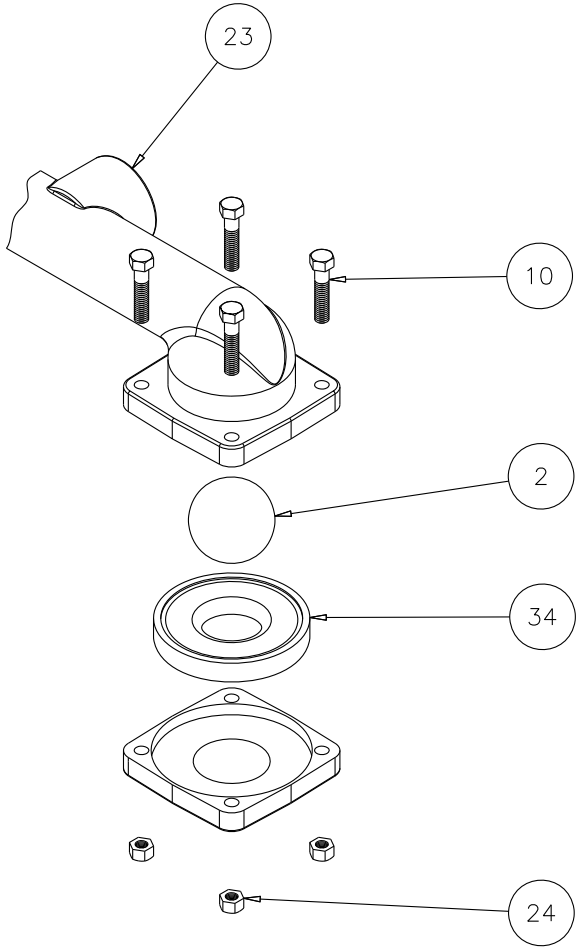


**with Non-Metallic Seats**

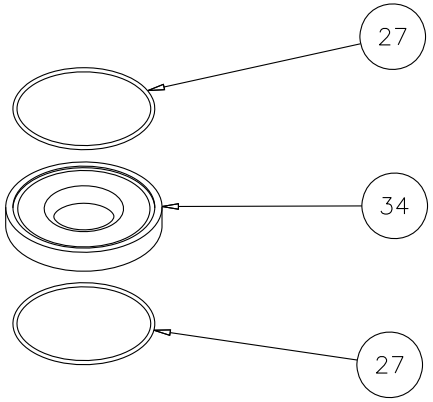


**with Metallic Seats**

# Optional Muffler Configurations, Drawing

**OPTION 0 ✶**
530-028-550 Integral Muffler uses (1) Cap and (4) 710-015-115 Self Tapping Screw to hold it in place.

**OPTION 1**
530-027-000 Sound Dampening Muffler screws directly into the Air Valve body. This muffler is equipped with a porous plastic element.

**OPTION 2**
530-010-000 Mesh Muffler screws directly into the Air Valve Body. This muffler is equipped with a metal element.

**OPTION 6**
530-033-000 Metal Muffler screws directly into the Air Body.

**ATEX Compliant**

✶ Note: Cannot be used with Air Valve Assembly 031-179-000 used on models equipped with cast iron or stainless steel centers.

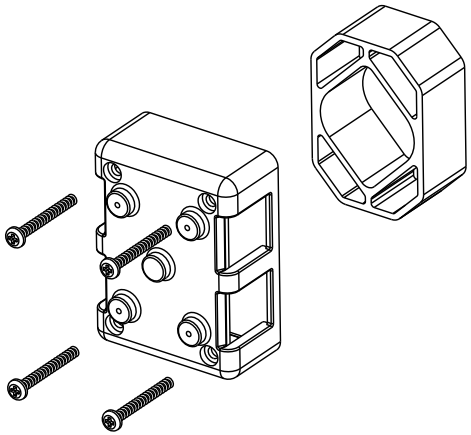

**Option 0**

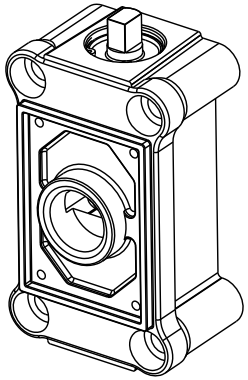

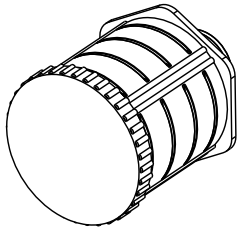

**Option 1 and 2**

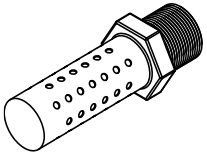

**Option 6**

## PUMPING HAZARDOUS LIQUIDS

When a diaphragm fails, the pumped liquid or fumes enter the air end of the pump. Fumes are exhausted into the surrounding environment. When pumping hazardous or toxic materials, the exhaust air must be piped to an appropriate area for safe disposal. See illustration #1 at right.

This pump can be submerged if the pump materials of construction are compatible with the liquid being pumped. The air exhaust must be piped above the liquid level. See illustration #2 at right. Piping used for the air exhaust must not be smaller than 1" (2.54 cm) diameter. Reducing the pipe size will restrict air flow and reduce pump performance. When the pumped product source is at a higher level than the pump (flooded suction condition), pipe the exhaust higher than the product source to prevent siphoning spills. See illustration #3 at right.

## CONVERTING THE PUMP FOR PIPING THE EXHAUST AIR

The following steps are necessary to convert the pump to pipe the exhaust air away from the pump.

Remove the muffler (item 43). The air distribution valve (item 1) has 1" NPT threads for piped exhaust.

**IMPORTANT INSTALLATION NOTE:** The manufacturer recommends installing a flexible conductive hose or connection between the pump and any rigid plumbing. This reduces stresses on the molded threads of the air exhaust port. Failure to do so may result in damage to the air distribution valve body.

Any piping or hose connected to the pump's air exhaust port must be conductive and physically supported. Failure to support these connections could also result in damage to the air distribution valve body.

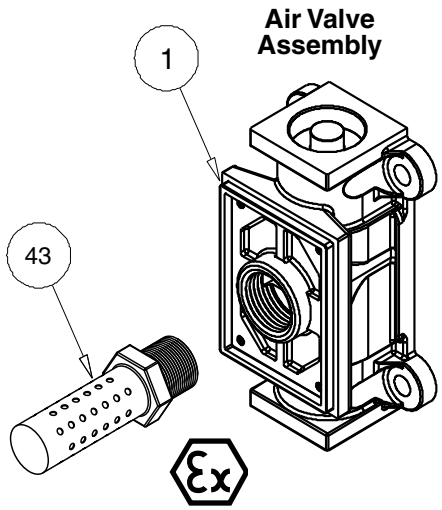


On ATEX compliant units the pump comes equipped with a standard metal muffler

## CONVERTED EXHAUST ILLUSTRATION

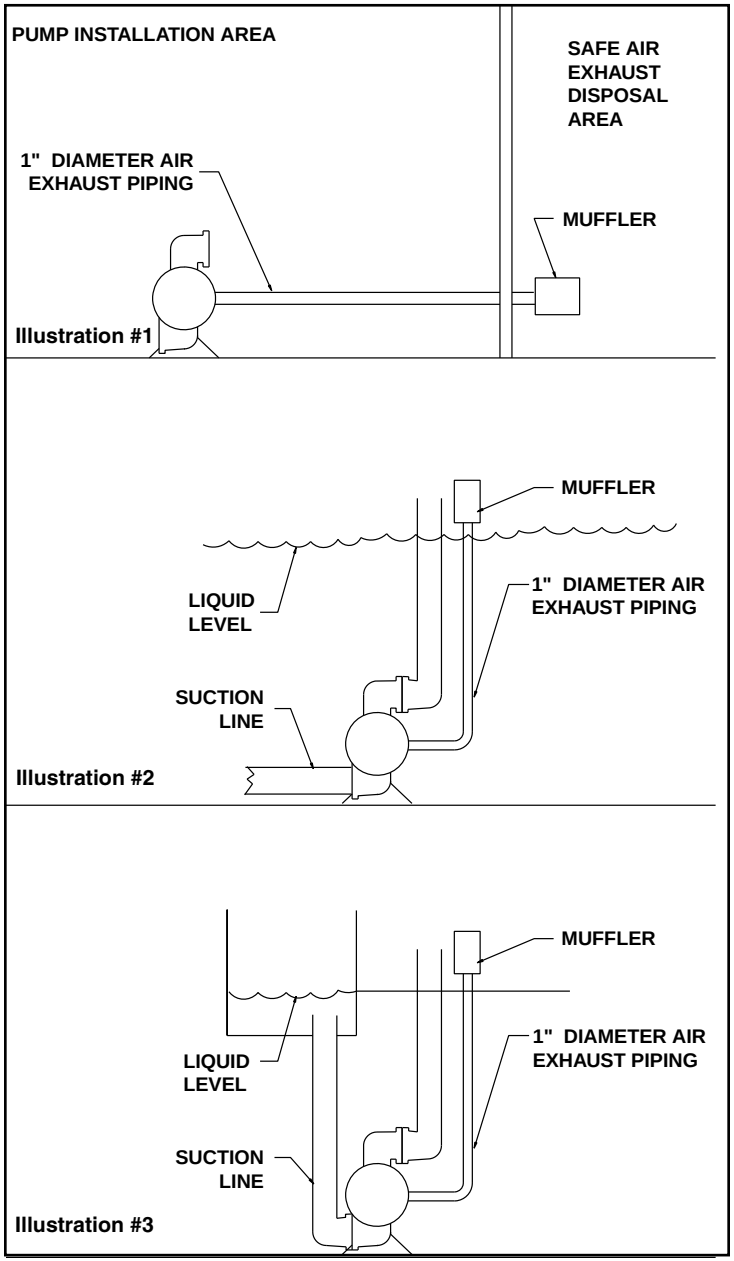

# Pulse Output Kit Drawing

**PULSE OUTPUT KIT OPTION**

This pump can be fitted with a Pulse Output Kit. This converts the mechanical strokes of the pump to an electrical signal which interfaces with the Stroke Counter/ Batch Controller or user control devices such as a PLC.

The Pulse Output Kits mount directly onto the Muffler Cap on the Air Distribution Valve Assembly or onto the air valve and senses each stroke of the main spool.

Consult the factory for further information and availability.

# Pulse Output Kits

| | |
|---|---|
| 475-244-001 | 10-30 VDC |
| 475-244-002 | 110/220 VAC |
| 475-244-003 | 10-30VDC, 110VAC and 220 VAC |

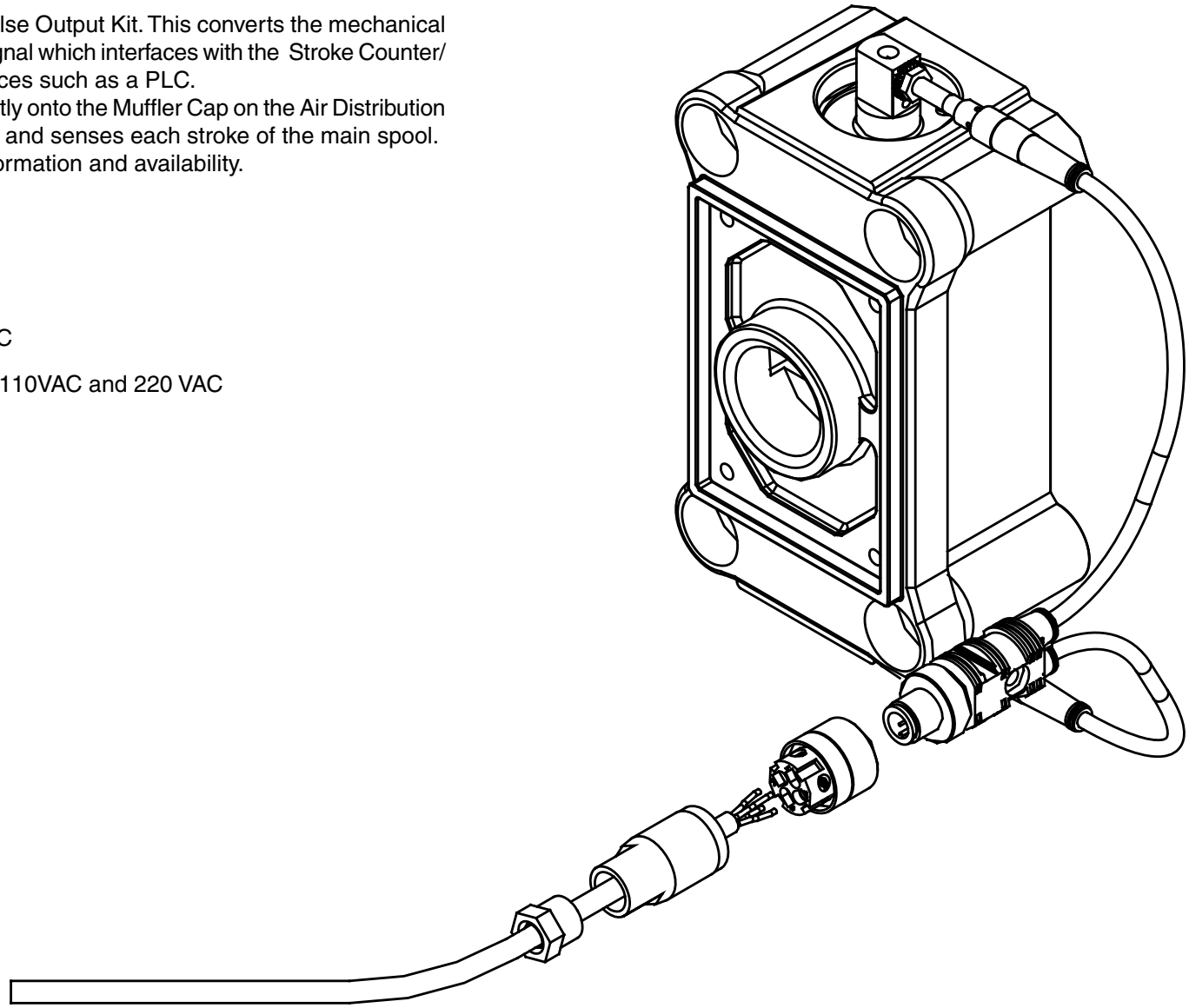

# Grounding The Pump

To be fully groundable, the pumps must be ATEX Compliant. Refer to pump data sheet for ordering.

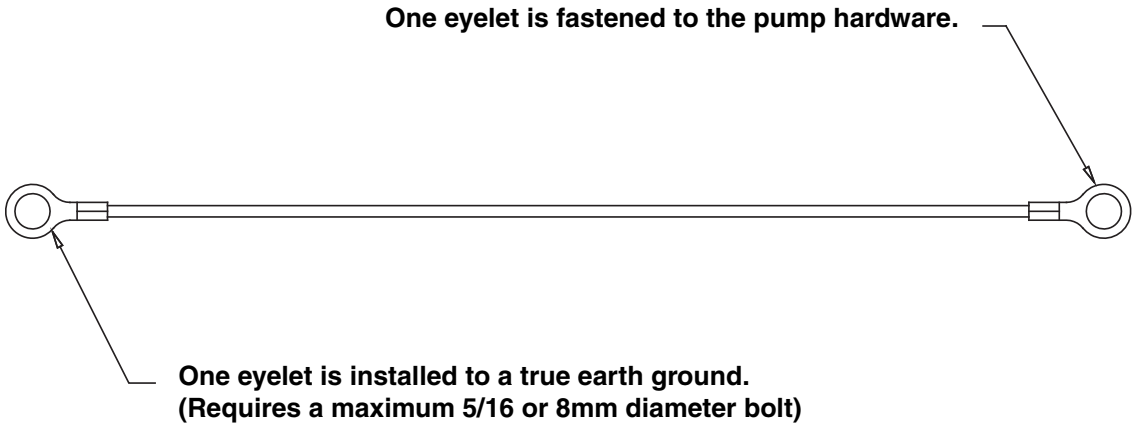


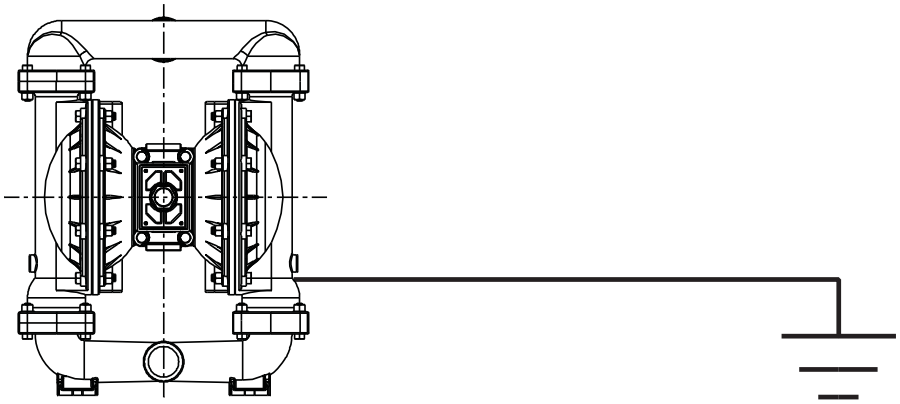

This 8 foot long (244 centimeters) Ground Strap, part number 920-025-000, can be ordered as a service part.

To reduce the risk of static electrical sparking, this pump must be grounded. Check the local electrical code for detailed grounding instruction and the type of equipment required.

**WARNING**

***Take action to prevent static sparking. Fire or explosion can result, especially when handling flammable liquids. The pump, piping, valves, containers or other miscellaneous equipment must be grounded.***

Declaration of Conformity

WARREN RUPP®

IDEX FLUID & METERING

# Declaration of Conformity

Warren Rupp®, IDEX AODD, Inc., 800 N. Main Street, P.O. Box 1568, Mansfield, Ohio, 44901-1568 USA, certifies that Air-Operated Double Diaphragm Pump Series: HDB, HDF, M Non-Metallic, S Non-Metallic, M Metallic, S Metallic, T Series, G Series, U Series, EH and SH High Pressure, W Series, SMA and SPA Submersibles, and Tranquilizer Surge Supressors comply with the European Community Directive 98/37/EC, Safety of Machinery. This product has used Harmonized Standard EN 809, Pumps and Pump Units for Liquids - Common Safety Requirements, to verify conformance.

| | |
|---|---|
| David Roseberry | October 20, 2005 |
| Signature of authorized person | Date of issue |
| David Roseberry | Engineering Manager |
| Printed name of authorized person | Title |
| Revision level B | April 1, 2009 |
| | Date of revision |

CE

Declaration of Conformity

Declaration of Conformity